5-2011

Groups and Semigroups Generated by Automata

David McCune
University of Nebraska-Lincoln, s-dmccune1@math.unl.edu

GROUPS AND SEMIGROUPS GENERATED BY AUTOMATA

by

David McCune

A DISSERTATION

Presented to the Faculty of

The Graduate College at the University of Nebraska

In Partial Fulfilment of Requirements

For the Degree of Doctor of Philosophy

Major: Mathematics

Under the Supervision of Professor Susan Hermiller and Professor John Meakin

Lincoln, Nebraska

May, 2011

GROUPS AND SEMIGROUPS GENERATED BY AUTOMATA

David McCune, Ph. D.

University of Nebraska, 2011

Adviser: Susan Hermiller and John Meakin

In this dissertation we classify the metabelian groups arising from a restricted class of invertible synchronous automata over a binary alphabet. We give faithful, self-similar actions of Heisenberg groups and upper triangular matrix groups. We introduce a new class of semigroups given by a restricted class of asynchronous automata. We call these semigroups "expanding automaton semigroups". We show that this class strictly contains the class of automaton semigroups, and we show that the class of asynchronous automaton semigroups strictly contains the class of expanding automaton semigroups. We demonstrate that undecidability arises in the actions of expanding automaton semigroups and semigroups arising from asynchronous automata on regular rooted trees. In particular, we show that one cannot decide whether or not an element of an asynchronous automaton semigroup has a fixed point. We show that expanding automaton semigroups are residually finite, while semigroups given by asynchronous automata need not be. We show that the class of expanding automaton semigroups is not closed under taking normal ideal extensions, but the class of semigroups given by asynchronous automata is closed under taking normal ideal extensions. We show that the class of expanding automaton semigroups is closed under taking direct products, provided that the direct product is finitely generated. We show that the class of automaton semigroups is not closed under passing to residually finite Rees quotients. We show that every partially commutative monoid is an automaton semigroup, and every partially commutative semigroup is an expanding automaton semigroup.

ACKNOWLEDGMENTS

I would like to express my gratitude to my advisors, Susan Hermiller and John Meakin, for all of their support and for the countless hours spent in weekly meetings and reading drafts of my papers. In addition, I'd like to thank them for all of their help with the lengthy job search; thanks for editing my job materials and helping me with various talks. Thanks especially to Susan for introducing me to Cayley graphs, and to John for introducing me to the Stallings foldings paper. The beauty of these concepts helped my third-year-graduate-student self decide to study groups and semigroups. I would also like to thank the other members of my advisory committee: Mark Brittenham, Jamie Radcliffe, and Vinodchandran Variyam. I would like to thank Mark and Jamie for reading over my thesis, and I'd especially like to thank Jamie for his charming British accent. I'd like to thank all of my buddies in the UNL math department, even though spending time with many of them only hindered my progress toward graduation. There are too many to name, but thanks to Firuz Kamalov, my soulmate Jesse Burke, the sweet, sweet Mike McCoy, and the Mathletes volleyball and flag football teams (I've never had so much fun repeatedly losing). Also, a special thanks to Yanqui Guo for always smiling–your incessant happiness gives me hope for a better world. I'd also like to thank my family: Mom and Dad, Diane, Grandpa and Grandma, Uncle Rob and Aunt Sandy, and Aunt Judy and Uncle Calvin. A special thanks is due to Aunt Sharon and Uncle David, who repeatedly let me transform their house into a personal laundry facility. Thanks also to Ben and Eric; if I had my way, the three of us would still be living together in that soulless, unlit hovel playing Counter-Strike and eating two-pound baked potatoes from Jason's Deli. Lastly, thanks to my fiancé Lori, who has been a constant source of support and who is a stone cold fox.

Contents

Chapter 1

Introduction

Groups generated by automata first received systematic study in the 1960's (see [8] by Glushkov, for example). In the 1970's and early 1980's, it became clear that automaton groups provided many examples of infinite finitely generated torsion groups (see [1] by Alešin and [11] by Grigorchuk). Thus this class of groups provides important contributions to the general Burnside problem (although the first known infinite finitely generated torsion group was not given by an automaton–see [9] by Golod). In addition, Grigorchuk proved in 1983 that the class of automaton groups contains groups of intermediate growth (see [12]). Indeed, almost all known groups of intermediate growth are automaton groups. More recently, Bartholdi and Nekrashevych have shown that automaton groups have deep connections with dynamical systems, and have used these groups to solve longstanding problems in holomorphic dynamics (see [2]).

The automata used to generate automaton groups are invertible synchronous automata. Recently, many generalizations of automaton groups have been studied, all of these generalizations arising from generalizations of invertible synchronous automata. If we allow invertible synchronous automata to have infinitely many states,

then groups generated by such automata are called *self-similar*. An introduction to these groups can be found in Nekrashevych's book [22]. In [31], Slupik and Sushchansky study semigroups arising from partial invertible synchronous automata. Cain, Reznikov, Sushchansky, Silva, and Steinberg investigate automaton semigroups, which are semigroups that arise from (not necessarily invertible) synchronous automata (see [4], [23], and [29]). In [13], Grigorchuk et al. study groups arising from asynchronous automata. This dissertation contributes to the study of groups and semigroups arising from automata.

In Chapter 2 we introduce the notation and background concepts necessary for understanding the remaining chapters. We give definitions of the various kinds of automata that we will use, as well as definitions of the semigroups that arise from these automata. We also give an algorithm for solving the word problem for semigroups arising from synchronous automata. This algorithm is well known, and is essentially the algorithm of minimization of an automaton described by Eilenberg in [7]. We also give examples of automaton groups, self-similar groups, automaton semigroups, and expanding automaton semigroups (an *expanding automaton* is a restricted kind of asynchronous automaton). All of these groups and semigroups can be defined in terms of their actions on a tree.

In Chapter 3 we focus on semigroups generated by asynchronous automata, although most of the material focuses on semigroups that can be realized by expanding automata. We obtain algebraic results about semigroups arising from expanding automata (as well as those arising from asynchronous automata) and study the dynamics of these semigroups acting on trees.

In Section 3.1 we distinguish various classes of semigroups. We say that a semigroup S is a *boundary expanding automaton semigroup* if there is an expanding automaton such that the states of the automaton generate S as the semigroup of

transformations on the boundary of the corresponding tree. *Boundary asynchronous automaton semigroups* are defined analogously. Propositions 3.1.1, 3.1.3, 3.1.4, 3.1.5, 3.1.6 combine to show the following.

Theorem (Propositions 3.1.1, 3.1.3, 3.1.4, 3.1.5, and 3.1.6). *Let AS denote the class of automaton semigroups, EAS denote the class of expanding automaton semigroups, ∂EAS denote the class of boundary expanding automaton semigroups, AAS denote the class of asynchronous automaton semigroups, and ∂AAS denote the class of boundary asynchronous automaton semigroups. Then*

$$AS \subsetneq EAS \subsetneq \partial EAS \subsetneq \partial AAS.$$

In addition,

$$EAS \subsetneq AAS \subseteq \partial AAS.$$

Currently, the relationship between the class of boundary expanding automaton semigroups and the class of asynchronous automaton semigroups is unclear. Also, it is unknown if there are boundary asynchronous automaton semigroups that are not asyncrhonous automaton semigroups.

In Section 3.2 we investigate the dynamics of these semigroups on regular rooted trees. Given a set Σ, let Σ^* denote the free monoid generated by Σ and let Σ^ω denote the set of right-infinite words over Σ. The two main results are the following.

Theorem 3.2.3. 1. *There is no algorithm which takes as input an expanding automaton $\mathcal{A} = (Q, \Sigma, t, o)$ and states $q_1, q_2 \in Q$ and decides whether or not there is a word $w \in \Sigma^+$ with $q_1(w) = q_2(w)$.*

2. *There is no algorithm which takes as input an expanding automaton $\mathcal{A} = (Q, \Sigma, t, o)$ and states $q_1, q_2 \in Q$ and decides whether or not there is an infi-*

nite word $\eta \in \Sigma^\omega$ such that $q_1(\eta) = q_2(\eta)$.

Theorem 3.2.5. *1. There is no algorithm that takes as input an asynchronous automaton $\mathcal{A}$ over an alphabet Σ and a state q of $\mathcal{A}$ and decides whether or not q has a fixed point in Σ^+, i.e. decides if there is a word $w \in \Sigma^+$ such that $q(w) = w$.*

2. There is no algorithm that takes as input an asynchronous automaton $\mathcal{A}$ over an alphabet Σ and a state q of $\mathcal{A}$ and decides whether or not q has a fixed point in Σ^ω, i.e. decides if there is an infinite word $\eta \in \Sigma^\omega$ such that $q(\eta) = \eta$.

The above two theorems show that expanding automaton semigroups and asynchronous automaton semigroups have far richer dynamical behavior on trees than do automaton semigroups (or automaton groups), as both problems become easily decidable if the input is a synchronous automaton. We also show that there is an algorithm which takes as input an asynchronous automaton $\mathcal{A} = (Q, \Sigma, t, o)$ and a word $w \in Q^+$ and decides if w induces an injection from Σ^* to Σ^*.

In Section 3.3 we investigate the basic algebraic theory of semigroups arising from expanding automata. We show that boundary expanding automaton semigroups are residually finite (Proposition 3.3.2), and that there are restrictions on the periodicity structure of expanding automaton semigroups (Proposition 3.3.3). We also show in Proposition 3.3.4 that a group G is an automaton group (respectively self-similar group) if and only if G is an expanding automaton semigroup (respectively expanding self-similar semigroup), and we show that if H is the unique maximal subgroup of an expanding automaton semigroup then H is a self-similar group (Proposition 3.3.6). Proposition 3.3.6 implies that if $\mathcal{A}$ is an invertible synchronous automaton, then the group of units of $S(\mathcal{A})$ is a self-similar group (Corollary 3.3.7).

In Section 3.4 we investigate closure properties. We show that the class of expanding automaton semigroups is not closed under normal ideal extensions (Proposition 3.4.2) but asynchronous automaton semigroups are closed under normal ideal extensions (Proposition 3.4.3). We show that the direct product of two expanding automaton semigroups is an expanding automaton semigroup, provided that the direct product is finitely generated. We also show that the class of automaton semigroups is not closed under taking residually finite Rees quotients (Proposition 3.4.6).

In Section 3.4 we also construct further examples of expanding automaton semigroups. In particular, we construct free partially commutative monoids and free partially commutative semigroups as expanding automaton semigroups (Theorems 3.4.8 and 3.4.11).

To close chapter 3, in Section 3.5 we show that the power problem is decidable for boundary expanding automaton semigroups that arise from expanding automata of degree -1 (we use "degree" in the sense of Sidki in [27]).

In Chapter 4 we classify the metabelian groups that arise from a restricted, finite class of automata which we call *simply-sectioned automata*. We call the groups arising from these automata *simply-sectioned groups* (definitions are given in the chapter). The automaton given by Grigorchuk and Zuk in [16] which produces the (metabelian) lamplighter group is a simply-sectioned automaton, so this work seeks to discover what kinds of metabelian groups arise from "lamplighter-like"automata. This gives a partial answer to a question asked by Zoran Šunić, who asked which simply-sectioned groups are virtually solvable. The goal of this chapter is to prove the following ($\mathbb{Z}_2$ denotes the cyclic group of order 2).

Theorem 4.0.5. *Let G be a metabelian simply-sectioned group. Then G is one of the following: the trivial group, $\mathbb{Z}_2$, $\mathbb{Z}_2 \times \mathbb{Z}_2$, the dihedral group of order 8, $\mathbb{Z}$,*

the infinite dihedral group, $\mathbb{Z} \times \mathbb{Z}$, the lamplighter group, the klein bottle group, the group with presentation $\langle a, b \mid a^2 = 1, b^2 a = ab^2 \rangle$, or the group with presentation $\langle a, b \mid a^2 = b^4 = (ab)^4 = 1 \rangle$.

In Chapter 5, we construct faithful, self-similar actions of higher-dimensional Heisenberg groups and upper triangular matrix groups over $\mathbb{Z}$. Propositions 5.0.17 and 5.0.19 combine to show the following.

Theorem (Propositions 5.0.17 and 5.0.19). *The Heisenberg group of dimension $2n + 1$ is a self-similar group. The group of upper triangular matrices of dimension n is also a self-similar group.*

Chapter 2

Preliminaries

2.1 Definitions and Examples

2.1.1 Synchronous Automata

In this section we give the background necessary to discuss actions on trees arising from synchronous automata. Introductions to the material in this section can be found in [4] by Cain, [15] by Grigorchuk and Šunić, or Nekrashevych's book [22].

Given a set Σ, let Σ^+ denote the free semigroup generated by Σ and let Σ^* denote the free monoid generated by Σ. In a free monoid Σ^*, we will always denote the identity element by the empty word $\emptyset$. Given an element $w \in \Sigma^*$ and an $n \in \mathbb{N}$, let w^n denote the word $ww...w$, where the word w appears n times. Let $|\cdot| : \Sigma^* \to \mathbb{N}$ denote the word-length function on Σ^*. The monoid Σ^* can be given the structure of a regular rooted tree as follows. The vertex set of the tree is Σ^*, and there is an edge from w to $w\sigma$ for all $w \in \Sigma^*$ and $\sigma \in \Sigma$. We denote this tree by $\mathcal{T}(\Sigma^*)$.

A *synchronous automaton* is a quadruple $\mathcal{A} = (Q, \Sigma, t, o)$ where Q is a finite set of states, Σ is a finite alphabet, $t : Q \times \Sigma \to Q$ is a transition function, and

$o : Q \times \Sigma \to \Sigma$ is an output function. An *invertible synchronous automaton* is a synchronous automaton such that the restricted function $o|_{\{q\}\times\Sigma} : \{q\} \times \Sigma \to \Sigma$ induces a permutation of Σ for all q. We view a synchronous automaton $\mathcal{A} = (Q, \Sigma, t, o)$ as a finite, directed, labeled graph in the following way. The vertex set of the graph is Q and there is an edge from q_1 to q_2 labeled by $\sigma_1|\delta_1$ if and only if $t(q_1, \sigma_1) = q_2$ and $o(q_1, \sigma_1) = \delta_1$. Given an edge $\sigma_1|\delta_1$ in this graph, we refer to σ_1 as the *input letter* of the edge, and δ_1 as the *output letter* of the edge. The interpretation of this graph is that if the automaton $\mathcal{A}$ is in state q_1 and reads the symbol σ_1, then $\mathcal{A}$ changes to state q_2 and outputs the letter δ_2. Thus, if we fix $q_0 \in Q$, the automaton can read a sequence of symbols $\sigma_1 ... \sigma_k$ and output a sequence $\delta_1 ... \delta_k$ where $t(q_{i-1}, \sigma_i) = q_i$ and $o(q_{i-1}, \sigma_i) = \delta_i$ for all $i = 1, ..., k$.

Each state $q \in Q$ induces a function $f_q : \Sigma^* \to \Sigma^*$ in the following way: f_q acting on $\beta \in \Sigma^*$, denoted $f_q(\beta)$, is defined to be the sequence that the automaton outputs when the automaton starts in state q and reads the sequence β. We also insist that $f_q(\emptyset) = \emptyset$. The function f_q extends to a function $f'_q : \mathcal{T}(\Sigma^*) \to \mathcal{T}(\Sigma^*)$ in the natural way. We abuse notation and identify q with f_q and f'_q, as context should eliminate any confusion. If $\mathcal{A}$ is synchronous, then its states will generate level-preserving functions on the corresponding tree.

Viewing elements of state sets of synchronous automata as functions on a tree leads to the following definition.

Definition 2.1.1. Let $\mathcal{A} = (Q, \Sigma, t, o)$ be a synchronous automaton. Then the *automaton semigroup corresponding to* $\mathcal{A}$, denoted $S(\mathcal{A})$, is the semigroup generated by the states of $\mathcal{A}$. A semigroup S is said to be an *automaton semigroup* if there exists a synchronous automaton $\mathcal{A}$ such that $S \cong S(\mathcal{A})$.

Given a set Σ, let Σ^ω denote the set of right-infinite words of Σ. Geometrically,

Σ^ω is the boundary of the tree $\mathcal{T}(\Sigma^*)$. Given an element $v \in \Sigma^*$, let v^ω denote the element $vvv...$ of Σ^ω. If $\mathcal{A} = (Q, \Sigma, t, o)$ is a synchronous automaton, then we can also view an element $q \in Q^+$ as a transformation $\Sigma^\omega \to \Sigma^\omega$. The following proposition (which can be found in [4] by Cain) summarizes when two elements of an automaton semigroup are equal.

Proposition 2.1.2. *[**Lemma 2.2 of [4]**] Let $\mathcal{A} = (Q, \Sigma, t, o)$ be a synchronous automaton and $w_1, w_2 \in Q^+$. Then the following are equivalent:*

1. *$w_1 = w_2$ in $S(\mathcal{A})$.*
2. *$w_1(v) = w_2(v)$ for all $v \in \Sigma^*$.*
3. *$w_1(\rho) = w_1(\rho)$ for all $\rho \in \Sigma^\omega$.*

Thus, if $\mathcal{A}$ is synchronous, we can consider the action of $S(\mathcal{A})$ on Σ^* or Σ^ω without changing the semigroup.

Note that by construction, elements of automaton semigroups are graph endomorphisms of regular rooted trees, where a *graph endomorphism* of $\mathcal{T}$ is a function from $\mathcal{T}$ to $\mathcal{T}$ that sends vertices to vertices and edges to edges. In other words, elements of automaton semigroups are level-preserving endomorphisms of regular rooted trees. Let $\mathcal{T}$ be a regular rooted tree of degree d, i.e. each vertex of the tree has d "children". Label $\mathcal{T}$ in the following manner. The first level vertices are labeled $1, ..., d$ from left to right in ascending order. The children of the vertex labeled "1" are labeled with words of length 2 of the form $1i$ where $1 \leq i \leq d$ and the labeling ascends from left to right. Continue the labeling analogously. Note that the subtrees $w\mathcal{T}$ are isomorphic to $\mathcal{T}$ for any vertex w in $\mathcal{T}$. Let T_d denote the transformation semigroup on d objects. We write an element t of T_d as $[k_1, ..., k_d]$ where $t(i) = k_i$. Then the endomorphism

semigroup of $\mathcal{T}$, denoted End $\mathcal{T}$ decomposes as a wreath product:

$$\mathrm{End}\mathcal{T} = T_d \wr \mathrm{End}\mathcal{T}.$$

That is,

$$\mathrm{End}\mathcal{T} = T_d \ltimes (\mathrm{End}\mathcal{T} \times ... \times \mathrm{End}\mathcal{T})$$

where End$\mathcal{T}$ appears d times in the above equation and T_d acts on $(\mathrm{End}\mathcal{T})^d$ by transformations of the coordinates. Thus we can write an element s of End$\mathcal{T}$ with a formula $s = \rho(s_1, ..., s_d)$ where $\rho \in T_d$ and $s_1, ..., s_d \in \mathrm{End}\mathcal{T}$. We call this the *wreath decomposition of* s. Geometrically, ρ is the action of s on the first level of the tree and s_i is the endomorphism induced by s on the subtree $i\mathcal{T}$. For the rest of this dissertation, we will denote a function $\tau : X = \{x_1, ..., x_n\} \to X^*$ by $[w_1, ..., w_n]$ where $\tau(x_1) = w_1$. If $s_1 = \rho(x_1, ..., x_d)$ and $s_2 = \eta(y_1, ..., y_d)$ are elements of End$\mathcal{T}$, then we compose them (right-to-left) by the formula

$$\begin{aligned} s_1 s_2 &= \rho(x_1, ..., x_d)\eta(y_1, ..., y_d) \\ &= \rho\eta(x_{\eta(1)}y_1, ..., x_{\eta(d)}y_d) \end{aligned} \tag{2.1}$$

Let $s = [i_1, ..., i_d](s_1, ..., s_d)$ be an element of End$\mathcal{T}$ where $\mathcal{T}$ is the d-ary regular rooted tree. For the remainder of this dissertation, we let τ_s denote the transformation that s induces on the first level of the tree, i.e. $\tau_s = [i_1, ..., i_d]$. If τ_s is the trivial permutation $\Sigma \to \Sigma$, then we simply write $s = (s_1, ..., s_n)$. Given an element $s = \tau_s(s_1, ..., s_d)$ in End$\mathcal{T}$, we call the endomorphism s_i the *section of* s *at* i. The endomorphism s_i is characterized by the equation $s(iw) = \tau_s(i)s_i(w)$ for all $w \in \{1, ..., d\}^*$. Inductively, for any $w \in \{1, ..., d\}^*$, let s_w denote the *section of* s *at*

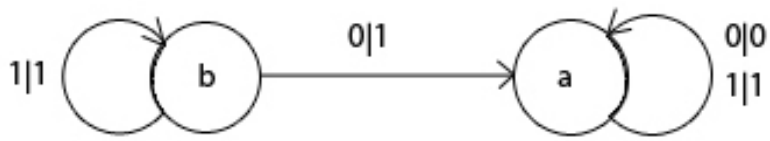

Figure 2.1: Example 2.1.3

w. The endomorphism s_w is characterized by the equation $s(ww') = s(w)s_w(w')$ for all $w \in \{1, ..., d\}^*$.

Let $\mathcal{A} = (Q, \Sigma, t, o)$ be a synchronous automaton and let $q \in Q$. Then for each $q \in Q$, the section of q at σ is $t(q, \sigma)$ (interpreted as a function from $\mathcal{T}(\Sigma^*)$ to $\mathcal{T}(\Sigma^*)$) for all $\sigma \in \Sigma$. Similarly, the section of q at $w \in \Sigma^*$ is found by viewing the word w as an input path starting at q. The terminal vertex of this path is q_w. We use the wreath decompositions of tree endomorphisms to describe the automaton of which they are states. See the example below.

Example 2.1.3. Let $\mathcal{A}$ be the automaton over the alphabet $\{0, 1\}$ described by the wreath decomposition $a = (a, a)$ and $b = [1, 1](a, b)$. In other words $\mathcal{A} = (Q, \Sigma, t, o)$ where $Q = \{a, b\}$, $\Sigma = \{0, 1\}$, $t(a, 0) = t(a, 1) = a$, $t(b, 0) = a$, $t(b, 1) = b$, $o(a, 0) = 0$, $o(a, 1) = 1$, and $o(b, 0) = o(b, 1) = 1$. See Figure 2.1. Note that the state a pointwise fixes $\{0, 1\}^*$, and so a is the identity element of $S(\mathcal{A})$. Note also that $b^m(0^\omega) = 1^m 0^\omega$, and so b has infinite order. Thus $S(\mathcal{A})$ is the free monoid of rank 1.

Given a synchronous automaton $\mathcal{A} = (Q, \Sigma, t, o)$ and a word $w = q_1...q_n$ in Q^+, note that we can use Equation 2.1 to construct an automaton $\mathcal{B}$ from $\mathcal{A}$ such that w is a state of $\mathcal{B}$. To do this, first compute $\tau_w = \tau_{q_1}...\tau_{q_n}$. Then, using Equation 2.1, compute $w_1, ..., w_{|\Sigma|}$. As $|\{w_v \ : \ v \in \Sigma^*\}| \leq |\{v \in \Sigma^* : |v| \leq n\}|$, iterating this process will eventually yield a finite automaton with w as a state.

Let $\mathcal{A} = (Q, \Sigma, t, o)$ be an invertible synchronous automaton. Then, as the langauge suggests, any element $q \in Q^+$ will induce an invertible transformation $\Sigma^* \to \Sigma^*$ (see Chapter 1 of [22] by Nekrashevych for details). This leads to the following definition.

Definition 2.1.4. Let $\mathcal{A} = (Q, \Sigma, t, o)$ be an invertible synchronous automaton. Then the *automaton group corresponding to* $\mathcal{A}$, denoted $G(\mathcal{A})$, is the group generated by the states of $\mathcal{A}$. A group G is said to be an *automaton group* if there is an invertible synchronous automaton $\mathcal{A}$ such that $G = G(\mathcal{A})$.

As elements of automaton groups are invertible, they are automorphisms of the corresponding tree. Let $\mathcal{T}$ be a regular rooted tree of degree d and let S_d denote the symmetric group on d objects. Then the automorphism group of $\mathcal{T}$, which we denote $\mathrm{Aut}\mathcal{T}$, decomposes as the following wreath product:

$$\mathrm{Aut}\mathcal{T} = S_d \ltimes \mathrm{Aut}\mathcal{T}.$$

Thus, as with synchronous automata, we can use this wreath decomposition to describe states of invertible synchronous automata and we use Equation 2.1 to compose these automorphisms.

We close this section with a few more definitions and two more examples, given below. An *infinite state synchronous automaton* is, appropriately enough, a synchronous automaton with an infinite state set. Given an infinite state synchronous automaton over an alphabet Σ, we can still view the states as functions $\Sigma^* \to \Sigma^*$.

Definition 2.1.5. A semigroup S is said to be a *self-similar semigroup* if there exists a finite or infinite state synchronous automaton $\mathcal{A}$ such that $S \cong S(\mathcal{A})$. A group G is said to be a *self-similar group* if there exists a finite or infinite state invertible

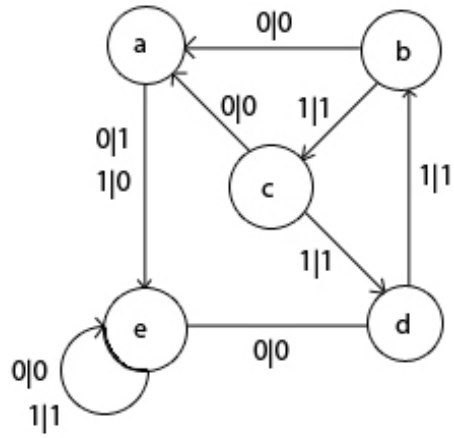

Figure 2.2: Automaton giving Grigorchuk's Group

synchronous automaton $\mathcal{B}$ such that $G \cong G(\mathcal{B})$.

Example 2.1.6. (Grigorchuk's Group). Define an automaton $\mathcal{A}$ by the wreath decomposition $a = [1,0](e,e), b = (a,c), c = (a,d), d = (e,b)$, and $e = (e,e)$ (see Figure 2.2). Then $G(\mathcal{A})$ is the *Grigorchuk group*. This group is one of the most interesting automaton groups, as it is an infinite torsion group and was the first known group of intermediate growth. Grigorhuck showed that this group is infinite torsion in [11], and showed that this group has intermediate growth in [12]. For more expository treatments of these proofs, see Section 1.6 of [22] by Nekrashevych for a proof of the torsion property and see [14] by Grigorchuk and Pak for a proof that the group has intermediate growth.

Example 2.1.7. (Infinite Direct Sums as Self-Similar Groups). We define an infinite state invertible automaton $\mathcal{A} = (Q = \{q_0, q_1, ...\}, \Sigma = \{0,1\}, t, o)$ as follows. Let $q_0 = (q_0, q_0)$. Then q_0 pointwise fixes $\{0,1\}^*$, and so is the identity element of $G(\mathcal{A})$. Let $q_1 = [1,0](q_0, q_0)$, and, for $n \geq 2$, define q_n inductively by $q_n = (q_{n-1}, q_{n-1})$. Let

$\eta \in \{0,1\}^\omega$, and let η_n denote the n-th letter of η for all $n \in \mathbb{N}$. Then

$$q_n(\eta_m) = \begin{cases} \eta_m & m \neq n \\ (\eta_m - 1) \bmod 2 & m = n \end{cases}.$$

Thus $q_i^2 = q_0$ for all i. Note that the above equation also implies that $q_i q_j = q_j q_i$ for all $i, j \in \mathbb{N}$. Furthermore, the above equation implies that given $i \in \mathbb{N}$, any word in $(Q - \{q_i\})^*$ cannot equal q_i. Thus $G(\mathcal{A}) \cong \bigoplus_1^\infty \mathbb{Z}_2$, where $\mathbb{Z}_2$ denotes the cyclic group of order 2.

Let G be a finite group of order n. The above paragraph allows us analogously to build $\bigoplus_1^\infty G$ as a self-similar group. Write $G = \{g_1, ..., g_n\}$ where g_1 is the identity of G. Construct G as an automaton group with automaton $\mathcal{A}$ over the alphabet $\{1, ..., n\}$ as follows. Let $\{q_{1,2}, ..., q_{1,n}\}$ be a state set in one-to-one correspondence with $G - \{g_1\}$, and let $t(q_{1,i}, j) = q_1$ for all i, where $q_1 = (q_1, ..., q_1)$. Let $o(q_{1,i}, j) = k$, where $g_i g_j = g_k$. Then $G(\mathcal{A}) \cong G$ by Cayley's Theorem (we have realized G as a permutation group and have simply made that permutation group act on the first level of the n-ary tree).

We construct an infinite state automaton $\mathcal{B}$ containing $\mathcal{A}$ as follows. The state set of $\mathcal{B}$ is $\{q_{i,j}\} \cup \{q_1\}$ where $i \in \mathbb{N}$ and $2 \leq j \leq n$. For all $i \geq 2$, let $q_{i,j} = (q_{i-1,j}, ..., q_{i-1,j})$ (where there are n terms in the wreath decomposition). Let $\eta \in \{1, ..., n\}^\omega$ and fix an $i \in \mathbb{N}$. Then, just as above,

$$q_{i,j}(\eta_m) = \begin{cases} \eta_m & m \neq i \\ q_{1,j}(\eta_m) & m = i \end{cases}.$$

Thus $G(\mathcal{B}) \cong \bigoplus_1^\infty G$.

2.1.2 Asynchronous Automata

Chapter 3 mainly focuses on asynchronous (not just synchronous) automata. An *asynchronous automaton* is a quadruple $\mathcal{A} = (Q, \Sigma, t, o)$ where Q is a finite state set, Σ is a finite alphabet, $t : Q \times \Sigma \to Q$ is a transition function, and $o : Q \times \Sigma \to \Sigma^*$ is an output function. The difference between asynchronous and synchronous automata is that the output function of an asynchronous automaton is Σ^*, not Σ.

Just as with synchronous automata, we can view the states of an asynchronous automaton over an alphabet Σ^* as functions $\Sigma^* \to \Sigma^*$. These functions can be extended to partial transformations of Σ^ω, so we can also view the states of an asynchronous automaton as partial transformations of the boundary of the corresponding tree. This leads to the following definition.

Definition 2.1.8. Let $\mathcal{A} = (Q, \Sigma, t, o)$ be an asynchronous automaton. Then the *asynchronous automaton semigroup corresponding to* $\mathcal{A}$, again denoted $S(\mathcal{A})$, is the semigroup generated by the states of $\mathcal{A}$. More precisely, two elements $q_1, q_2 \in Q^+$ represent the same element of $S(\mathcal{A})$ if and only if q_1 and q_2 induce the same transformation $\Sigma^* \to \Sigma^*$. A semigroup S is said to be an *asynchronous automaton semigroup* if there exists an asynchronous automaton $\mathcal{A}$ such that $S \cong S(\mathcal{A})$.

We emphasize that a state of an asynchronous automaton over an alphabet Σ need not induce a function from Σ^ω to Σ^ω, but can induce a partial function. For example, consider the automaton $\mathcal{A} = (\{a\}, \{0, 1\}, t, o)$ where $t(a, 0) = t(a, 1) = a$, $o(a, 0) = \emptyset$, and $o(a, 1) = 1$. Let $\eta \in \{0, 1\}^\omega$, and suppose that η contains exactly n 1's. Then $a(\eta) = 1^n$, which is not in $\{0, 1\}^\omega$. On the other hand, if η contains infinitely many 1's then $a(\eta) = 1^\omega$. Thus, when considering a as a partial function from $\{0, 1\}^\omega$ to $\{0, 1\}^\omega$, $\delta \in \{0, 1\}^\omega$ is in the domain of a if and only if δ contains infinitely many 1's.

Let $\mathcal{A} = (Q, \Sigma, t, o)$ be an asynchronous automaton, and suppose that q induces

a partial function from Σ^ω to Σ^ω. Then it is straightforward to show that there must exist a circuit in $\mathcal{A}$ accessible from q such that for each edge on the circuit, the output word is $\emptyset$. Thus one can tell from a quick look at the underlying graph whether or not the corresponding boundary asynchronous automaton semigroup contains partial functions.

Recall by Proposition 2.1.2 that, in the case of synchronous automata, it is irrelevant whether one considers the states of the automaton as transformations of the tree or transformations of the boundary of the tree. In the case of asynchronous automata, this distinction does matter. As a trivial example, consider the asynchronous automaton $\mathcal{A} = (\{a\}, \{0\}, t, o)$ where $t(a, 0) = a$ and $o(a, 0) = 00$. Then $a^m(0) = 0^{2^m}$ for all $m \in \mathbb{N}$, and so $S(\mathcal{A})$ is the free semigroup of rank 1 if one uses the definition of asynchronous automaton semigroup above. However, the boundary of the tree $\{0\}^*$ has only one element, so the semigroup generated by a is trivial if one considers semigroup as transformations on the boundary. This distinction leads to the following definition.

Definition 2.1.9. Let $\mathcal{A} = (Q, \Sigma, t, o)$ be an asynchronous automaton. Then the *boundary asynchronous automaton semigroup corresponding to* $\mathcal{A}$, denoted $\partial S(\mathcal{A})$, is the semigroup generated by the states of $\mathcal{A}$ when considered as transformations $\Sigma^\omega \to \Sigma^\omega$. More precisely, two elements $q_1, q_2 \in Q^+$ represent the same element of $\partial S(\mathcal{A})$ if and only if q_1 and q_2 induce the same transformation $\Sigma^\omega \to \Sigma^\omega$. A semigroup S is said to be a *boundary asynchronous automaton semigroup* if there exists an asynchronous automaton $\mathcal{A}$ such that $S \cong \partial S(\mathcal{A})$.

Given an asynchronous automaton $\mathcal{A} = (Q, \Sigma, t, o)$, it is straightforward to show that $\partial S(\mathcal{A})$ is a quotient of $S(\mathcal{A})$. To see this, note that if $t_1, t_2 \in Q^*$ induce the same transformation $\Sigma^* \to \Sigma^*$, then t_1 and t_2 will induce the same transformation

$\Sigma^\omega \to \Sigma^\omega$.

Just as with synchronous automata, an asynchronous automaton can be given by a "wreath recursion" kind of formula. Let $\mathcal{A} = (Q, \{1, ..., n\}t, o)$ be an asynchronous automaton, and let $f \in Q$. Then we can decompose f as follows:

$$f = \tau_f(f_1, ..., f_n),$$

where τ_f is the transformation f induces $\Sigma \to \Sigma^*$ and each f_i is characterized by the equation $f(iw) = \tau_f(i)f_i(w)$ for all $w \in \Sigma^*$. Thus we call f_i the *section of f at i*. If f and g are states of $\mathcal{A}$, then their composition can be computed with a formula analogous to Equation 2.1:

$$f \circ g = [f(v_1), ..., f(v_n)](f_{v_1}g_1, ..., f_{v_n}g_n). \tag{2.2}$$

Also, as in the case of synchronous automata, if $w \in Q^+$, then (using Equation 2.2) we can construct an automaton $\mathcal{B}$ with w as a state of $\mathcal{B}$.

Much of Chapter 3 focuses on a restricted class of asynchronous automata which we call "expanding automata". An *expanding automaton* is an asynchronous automaton (Q, Σ, t, o) such that the range of o is Σ^+ (rather than Σ^*). Just as for asynchronous automata, we can define "expanding automaton semigroups" and the corresponding boundary semigroups.

Definition 2.1.10. Let $\mathcal{A} = (Q, \Sigma, t, o)$ be an expanding automaton. Then the *expanding automaton semigroup corresponding to $\mathcal{A}$* is the semigroup generated by the states of $\mathcal{A}$, where two words $q_1, q_2 \in Q^+$ are equal in $S(\mathcal{A})$ if and only if $q_1(w) = q_2(w)$ for all $w \in \Sigma^*$.

Definition 2.1.11. Let $\mathcal{A} = (Q, \Sigma, t, o)$ be an expanding automaton. Then the

boundary expanding automaton semigroup corresponding to $\mathcal{A}$ is the semigroup generated by the states of $\mathcal{A}$, where two words $q_1, q_2 \in Q^+$ are equal in $\partial S(\mathcal{A})$ if and only if $q_1(\eta) = q_2(\eta)$ for all $\eta \in \Sigma^\omega$.

Note that if $s \in S$ where S is an expanding automaton semigroup acting on $\mathcal{T}(\Sigma^*)$, then s need not induce a level-preserving function $\mathcal{T}(\Sigma^*) \to \mathcal{T}(\Sigma^*)$. Thus elements of expanding automaton semigroups are not necessarily graph morphisms. If $\mathcal{A} = (Q, \Sigma, t, o)$ is an expanding automaton, then the output function mapping into Σ^+ implies that $|w| \leq |s(w)|$ for all $s \in S(\mathcal{A})$, $w \in \Sigma^*$. We say that a function $f : \mathcal{T}(\Sigma^*) \to \mathcal{T}(\Sigma^*)$ is *prefix-preserving* if $f(v)$ is a prefix of $f(w)$ in Σ^* whenever v is a prefix of w in Σ^*. We call a function $f : \mathcal{T}(\Sigma^*) \to \mathcal{T}(\Sigma^*)$ *length-expanding* if $|w| \leq |f(w)|$ for all $w \in \Sigma^*$ and $f(\emptyset) = \emptyset$. If we topologize the tree $\mathcal{T}(\Sigma^*)$ by making each edge isometric to $[0, 1]$ and imposing the path metric, then an element of an expanding automaton semigroup acting on $\mathcal{T}(\Sigma^*)$ will induce a prefix-preserving, length-expanding endomorphism of the tree. We call $f : \mathcal{T}(\Sigma^*) \to \mathcal{T}(\Sigma^*)$ an *expanding endomorphism* if f is prefix-preserving and length-expanding. Any expanding endomorphism f of the n-ary tree can be decomposed as $f = \tau_f(f_1, ..., f_n)$ where f_i is an expanding endomorphism for all i. The endomorphism f can be realized as a state of an expanding automaton if and only if $|\{f_w \mid w \in \{1, ..., n\}^*\}| < \infty$.

As with self-similar groups and semigroups, we can define *expanding self-similar semigroups* and *asynchronous self-similar semigroups* by allowing our automata to have infinitely many states.

In closing this section, we mention that we use the word "action" when describing the functions arising from these semigroups on regular rooted trees. In general, if one says that a monoid M has an action on a set, one assumes that the identity of the monoid fixes each element of the set. In this case, however, we can have expanding

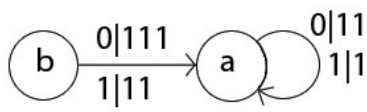

Figure 2.3: Example 2.1.12

automaton monoids (and indeed automaton monoids) in which the identity element of the monoid does not fix each vertex of the tree. Thus, unless otherwise indicated, we are always discussing semigroup actions. Consider Example 2.1.12 below.

Example 2.1.12. Consider the expanding automaton $\mathcal{A}$ over the alphabet $\{0,1\}$ given by $a = (a,a)[11,1], b = (a,a)[111,11]$. See Figure 2.3 for the graphical representation of $\mathcal{A}$. We claim that a is an identity element of $S(\mathcal{A})$ even though a does not fix every element of $\mathcal{T}(\{0,1\}^*)$. To see this, first note that the range of a is $\{1\}^*$. Since a fixes this set pointwise, $a^2 = a$. Now the range of b is $\{1\}^* - \{1\}$ and a fixes this set, so $ab = b$. Now let $w \in \{0,1\}^*$, and let $w_0 \in \mathbb{N}$ denote the number of 0's that occur in w; define w_1 analogously. Then $a(w) = 1^{2w_0+w_1}$, and therefore $ba(w) = 1^{2w_0+w_1+1}$. Let w' be the word obtained from w by deleting the first letter of w. If 0 is the first letter of w, then

$$b(w) = 1111^{2(w')_0+(w')_1} = 1^{2w_0+w_1+1} = ba(w).$$

Similarly, if w starts with a 1 we have $b(w) = ba(w)$. Hence $ab = b = ba$, and a is an identity element. Thus the action of $S(\mathcal{A})$ on $\{0,1\}^*$ includes the action of a semigroup identity that is not the identity function on $\{0,1\}^*$.

2.2 Solving the Word Problem

In this section we give algorithms for solving the word problem for automaton groups and asynchronous automaton semigroups. These algorithms are well known, and can be traced back to Eilenberg's book (see [7]).

Let S be a semigroup generated by a set X. Then the *word problem* for S asks if there is an algorithm which takes two words $w_1, w_2 \in X^+$ as input and decides whether or not w_1 and w_2 are distinct elements of S. If there is such an algorithm, we say that S has solvable word problem. If G is a group generated (as a group) by a set Y, then we say that G has solvable word problem if there exists an algorithm which takes a word $w \in (Y \cup Y^{-1})^*$ as input and decides whether or not w is trivial in G.

Let $\mathcal{A} = (Q, \Sigma, t, o)$ be an invertible synchronous automaton. Then the *inverse automaton for* $\mathcal{A}$, denoted by $\mathcal{A}^{-1}$, is the automaton with state set Q^{-1}, alphabet Σ, transition function t^{-1}, and output function o^{-1} defined by $t^{-1}(q_1^{-1}, \sigma) = q_2^{-1}$ if and only if $t(q_1, \sigma) = q_2$ and $o^{-1}(q^{-1}, \sigma_1) = \sigma_2$ if and only if $o(q, \sigma_2) = \sigma_1$. This automaton is called the inverse automaton because qq^{-1} is the automorphism that pointwise fixes Σ^*. Let $\mathcal{A}^{\pm 1}$ denote $\mathcal{A} \cup \mathcal{A}^{-1}$.

Given an invertible automaton $\mathcal{A} = (Q, \Sigma, t, o)$, the *dual automaton for* $\mathcal{A}$, denoted by $\mathcal{A}'$, is the automaton with state set Σ, alphabet $Q \cup Q^{-1}$ (i.e. the alphabet is the state set of $\mathcal{A}^{\pm}$), transition function t' given by $t'(\sigma_1, q) = \sigma_2$ if and only if $o(q, \sigma_1) = \sigma_2$, and output function o' given by $o'(\sigma, q_1) = q_2$ if and only if $t(q_1, \sigma) = q_2$. The dual automaton is a tool used for computing sections of elements of $(Q \cup Q^{-1})^*$. Let $w \in (Q \cup Q^{-1})^*$, and write $w = q_1 q_2 ... q_n$ where $q_i \in Q \cup Q^{-1}$. Then w_{σ_i} is computed by feeding the word $q_1 q_2 ... q_n$ into the automaton $\mathcal{A}'$ starting at σ_i and recording the sequence of outputs. Because we compose functions right-to-left, the

dual automaton will scan a word from right to left. The dual automaton outputs the resulting sequence from right to left, and that sequence will be the desired section. See chapter 1 of [22] by Nekrashevych for details.

The dual automaton has proven to be a useful tool. Steinberg, Vorobets, and Vorobets use the dual automaton to show that free groups are automaton groups in [32], [33], and [34]. In [26], Savchuk and Vorobets show that free products of groups of order 2 are automaton groups.

Using the inverse and dual automata, we are now ready to give an algorithm for solving the word problem for automaton groups.

Proposition 2.2.1. *Let G be an automaton group. Then G has solvable word problem.*

Proof. Let $\mathcal{A} = (Q, \Sigma, t, o)$ be an invertible synchronous automaton and let $G = G(\mathcal{A})$. Let $w \in (Q \cup Q^{-1})^*$. Begin by calculating τ_w. If τ_w is not the trivial permutation of Σ, then w is non-trivial in G. So suppose that τ_w is the trivial permutation of Σ. Then, using $\mathcal{A}'$, calculate w_σ for all $\sigma \in \Sigma$. Using the permutations of the states of $\mathcal{A}$, calculate τ_{w_σ} for all $\sigma \in \Sigma$. If one of these permutations is non-trivial, then w is non-trivial in G. If all of these permutations are trivial, then use the dual to calculate the sections of w at words of length two in Σ and iterate the process. As $|\{w_v \ : \ v \in \Sigma^*\}| \leq |\{v \in \Sigma^* \ : \ v \text{ has length at most the length of } w \text{ in } (Q \cup Q^{-1})^*\}|$, this process terminates in at most exponential time. $\square$

Note that the above algorithm works for any automaton group G, and so we say that the class of automaton groups has solvable uniform word problem. The class of asynchronous automaton semigroups also has solvable uniform word problem. In the case of asynchronous automata there is no nice analogue for a dual automaton. One can construct a dual automaton, but the resulting graph will be infinite and does not

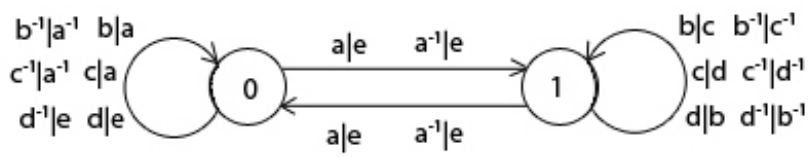

Figure 2.4: The dual automaton for Grigorchuk's Group

make the computations any easier. Thus the algorithm that solves the word problem for asynchronous automaton semigroups does not reference a dual automaton.

Proposition 2.2.2. *Asynchronous automaton semigroups have solvable uniform word problem.*

Proof. Let $\mathcal{A} = (Q, \Sigma, t, o)$ be an asynchronous automaton, and let $S = S(\mathcal{A})$. Let $s = q_1 ... q_m$ and $t = q'_1 ... q'_n$ be elements of S. If $\tau_s \neq \tau_t$, then $s \neq t$. If $\tau_s = \tau_t$, then use Equation (2.2) to calculate s_σ and t_σ for all $\sigma \in \Sigma$. If $\tau_{s_\sigma} \neq \tau_{t_\sigma}$ for some $\sigma \in \Sigma$, then $s \neq t$. If $\tau_{s_\sigma} = \tau_{t_\sigma}$ for all $\sigma \in \Sigma$, then calculate τ_{s_w}, τ_{t_w} for each $w \in \Sigma^+$ with $|w| = 2$, and continue the process. Since $|\{s_w \ : \ w \in \Sigma^*\}| \leq |\{w' \in Q^* \ : \ |w'| \leq m\}|$ and $|\{t_w \ : \ w \in \Sigma^*\}| \leq |\{w' \in Q^* \ : \ |w'| \leq n\}|$, this process stops in finite time. $\square$

Example 2.2.3. (Grigorchuk's group) Recall that Grigorchuk's group, denoted by $\mathcal{G}$, is given by the automaton with wreath recursion $a = [1, 0](e, e), b = (a, c), c = (a, d), d = (e, b)$, and $e = (e, e)$. Note that e pointwise fixes $\{0, 1\}^*$, and so e is the identity of $\mathcal{G}$. To discover other relations in $\mathcal{G}$, we use the dual automaton (see Figure 2.4; we omit the identity element e from the figure). Using the dual, we see that $a^2 = (e, e)$. Thus $a^2 = e$. Similarly,

$$b^2 = (a^2, a^2), \ c^2 = (a^2, d^2), \ d^2 = (1, b^2)$$

and so all of the generators of $\mathcal{G}$ have order 2. On the other hand, note that $aca^{-1}c^{-1} = acac = (da, ad)$. Since τ_{ad} is non-trivial, $acac$ is non-trivial in $\mathcal{G}$.

Chapter 4 relies heavily on such computations. We mostly omit such calculations, as they go exactly as in the previous example. Most of the computations were initially done with the GAP package AutomGrp developed by Muntyan and Savchuk ([21]).

Chapter 3

Semigroups Arising from Asynchronous Automata

3.1 Distinguishing Classes of Semigroups

By definition of the various kinds of automata (see Chapter 2), one can see that the class of automaton groups is contained in the class of automaton semigroups which is contained in the class of expanding automaton semigroups which is contained in the class of asynchronous automaton semigroups. In this section, we show that all of these containments are strict. In addition, we show that the class of expanding automaton semigroups is strictly contained in the class of boundary expanding automaton semigroups which is strictly contained in the class of boundary asynchronous automaton semigroups. We also show that the class of asynchronous automaton semigroups is contained in the class of boundary asynchronous automaton semigroups.

Proposition 3.1.1. *The class of automaton semigroups is strictly contained in the class of expanding automaton semigroups.*

Proof. Let $m, n \in \mathbb{N} - \{1\}$, and let $S_{m,n}$ denote the semigroup with semigroup presentation $\langle a, b \mid b^m = b^n, ab = b \rangle$. We show that $S_{m,n}$ is not an automaton semigroup for any distinct m, n, but $S_{m,n}$ is an expanding automaton semigroup for any distinct m, n.

Note that for any distinct $m, n \in \mathbb{N}$ with $m < n$, the rewriting system defined by the rules $ab \to b$ and $b^n \to b^m$ is terminating and confluent. Thus $\{b^j a^k \mid j = 1, ..., n-1,\ k \in \mathbb{N}\}$ is a set of normal forms for $S_{m,n}$, and so $a^r \neq a^s$ in $S_{m,n}$ for any distinct $r, s \in \mathbb{N}$ (i.e. a is not *periodic*).

We begin by showing $S_{m,n}$ is not an automaton semigroup. Fix $1 < m < n$. Let $\mathcal{A}_{m,n} = (Q, \Sigma, t, o)$ be a synchronous automaton such that $S(\mathcal{A}_{m,n})$ is generated by two elements a and b with $b^m = b^n$ and $ab = b$. We show that a is periodic in $S(\mathcal{A}_{m,n})$. Without loss of generality, we assume that a and b are both states of $\mathcal{A}_{m,n}$. Let $\sigma_1 \in \Sigma$ be such that there exists a minimal number $n > 0$ with $a^n(\sigma_1) = \sigma_1$. Since the action of a is length-preserving, there must exist such a σ_1. Let $\{\sigma_1, ..., \sigma_{n-1}\}$ be the orbit of σ_1 under the action of a where $a(\sigma_i) = \sigma_{i+1}$ for $1 \leq i \leq n-2$ and $a(\sigma_{n-1}) = \sigma_1$.

First suppose that $a_{\sigma_j} = a^{m_j}$ for each $1 \leq j \leq n-1$. If $m_j > 1$ for some j, then $(a^{m_j})_{\sigma_j} = a^{n_1}$ where $n_1 > m_j$, $(a^{n_1})_{\sigma_j} = a^{n_2}$ where $n_2 > n_1$, and so on. In this case, a will have infinitely many sections, which cannot happen since a is a state of a finite automaton. Thus $m_j = 1$ for all j. Note that if $a^k(\sigma) = \sigma_1$ for some $k > 0$ and $\sigma \in \Sigma$, then the same logic implies that if $a_\sigma = a^r$ for some r then $r = 1$. Thus we see that if $\sigma \in \Sigma$ and the section of a at $a^k(\sigma)$ is a power of a for all k, then the section of a at $a^k(\sigma)$ is a for all $k > 0$. Suppose that $a_\sigma = a$ for all $\sigma \in \Sigma$. Since the action of a is length-preserving, there exist distinct $r, s \in \mathbb{N}$ such that $\tau_a^r = \tau_a^s$. Then, as the only section of a is a, we have $a^r = a^s$.

Suppose now that there is a letter $\sigma \in \Sigma$ such that there exists σ' in the forward orbit of σ under the action of a where $a_{\sigma'} \notin \langle a \rangle$. Since $ab = b$ and b is periodic, there

exist distinct $m_\sigma, n_\sigma \in \mathbb{N}$ with $n_\sigma > m_\sigma$ such that $(a^{m_\sigma})_\sigma = (a^{m_\sigma + k(n_\sigma - m_\sigma)})_\sigma$ for any $k \in \mathbb{N}$. To see that this is true, let t be the minimal number such that the orbit of $a^t(\sigma)$ under the action of a is a cycle. Since the action of a is length-preserving, there must exist such a t. Suppose that there is a $k \in \mathbb{N}$ such that $k \geq t$ and the section of a at $a^k(\sigma)$ is $b^i a^j$ for some $i \in \mathbb{N}$ and $j \in \mathbb{N} \cup \{0\}$. Then the relation $ab = b$ implies that for any $k' \geq k$ we have $(a^{k'})_\sigma = b^{i'} a^j$ for some i'. Periodicity of b then implies that there are $m_\sigma, n_\sigma \geq k$ as desired. Suppose, on the other hand, that the section of a at $a^r(\sigma)$ is in $\langle a \rangle$ for all $r \geq t$. Let c be the maximal number such that the section of a at $a^c(\sigma)$ is not in $\langle a \rangle$ and let $p \in \mathbb{N}$. Then $(a^{c+p})_\sigma = a^{n_p}(a^c)_\sigma$ for some $n_p \in \mathbb{N}$ and the relation $ab = b$ implies that $(a^{c+p})_\sigma = (a^c)_\sigma$. In this case we let $m_\sigma = c$ and $n_\sigma = c + 1$.

Let $\hat{\Sigma} = \{\sigma \in \Sigma \mid (a^r)_\sigma \notin \langle a \rangle \text{ for some } r\}$. By the preceding paragraph, for each $\sigma \in \hat{\Sigma}$ choose $m_\sigma, n_\sigma \in \mathbb{N}$ such that $(a^{m_\sigma})_\sigma = (a^{m_\sigma + k(n_\sigma - n_\sigma)})_\sigma$. Since a acts in a length-preserving fashion, there exist distinct t_1, t_2 such that $\tau_a^{t_1} = \tau_a^{t_1 + k(t_2 - t_1)}$ for all $k \in \mathbb{N}$. Thus we can choose distinct $s, t \in \mathbb{N}$ such that $\tau_{a^s} = \tau_{a^{s+k(t-s)}}$ and $(a^s)_\sigma = (a^{s+k(t-s)})_\sigma$ for all $\sigma \in \hat{\Sigma}$ and $k \in \mathbb{N}$. We claim that $a^s = a^t$. To see this, let $\delta \in \Sigma$. If $\eta \in \hat{\Sigma}$, then the choice of s and t implies that $(a^s)_\eta = (a^t)_\eta$. Fix $\delta \notin \hat{\Sigma}$. Then $(a^s)_\delta = a^s$ and $(a^t)_\delta = a^t$, so the choice of s and t implies that $\tau_{(a^s)_\delta} = \tau_{(a^t)_\delta}$. If $\eta \in \hat{\Sigma}$, then

$$(a^s)_{\delta\eta} = (a^s)_\eta = (a^t)_\eta = (a^t)_{\delta\eta}.$$

If $\eta \notin \hat{\Sigma}$ then $(a^s)_{\delta\eta} = a^s$ and $(a^t)_{\delta\eta} = a^t$, and so $\tau_{(a^s)_{\delta\eta}} = \tau_{(a^t)_{\delta\eta}}$. Similarly, let $w \in \Sigma^*$ and write $w = \sigma_1 ... \sigma_n$. Suppose there is an $i \in \mathbb{N}$ such that $\sigma_i \in \hat{\Sigma}$ and $\sigma_1, ..., \sigma_{i-1} \in \Sigma - \hat{\Sigma}$. Then

$$(a^s)_w = (a^s)_{\sigma_i ... \sigma_n} = (a^t)_{\sigma_i ... \sigma_n} = (a^t)_w.$$

On the other hand, if $w \in (\Sigma - \hat{\Sigma})^*$ then $\tau_{(a^s)_w} = \tau_{a^s} = \tau_{a^t} = \tau_{(a^t)_w}$. Thus $a^s = a^t$, and so $S(\mathcal{A}_{m,n})$ is not $S_{m,n}$.

Fix $1 < m < n$, and let $\Sigma = \{\sigma_1, ..., \sigma_n\}$ be an alphabet. Let $\mathcal{A}_{m,n}$ be the automaton over the alphabet Σ with states a and b (which depend on m, n) defined by

$$a = [\sigma_1\sigma_1, \sigma_2, ..., \sigma_n](a, ..., a), \quad b = \tau_b(b, ..., b)$$

where

$$\tau_b(\sigma_i) = \begin{cases} \sigma_{i+1} & 1 \leq i < n \\ \sigma_m & i = n \end{cases}.$$

Then $b^m = b^n$ in $S(\mathcal{A}_{m,n})$. Note also that the range of b is $\{\sigma_2, ..., \sigma_n\}^*$, and a fixes this set. So $ab = b$. Now fix $i, j \in \mathbb{N}$ such that $i < n$. Then $b^i a^j(\sigma_1) = b^i(\sigma_1^{2^j}) = \sigma_i^{2^j}$. Thus $b^i a^j = b^k a^l$ in $S(\mathcal{A}_{m,n})$ if and only if $i = k$ and $j = l$, and we have $S(\mathcal{A}_{m,n}) \cong S_{m,n}$. $\square$

The constructions in the previous proof allows us to show the analogous proposition for boundary expanding automaton semigroups.

Recall that the bicyclic monoid is the monoid with monoid presentation $B := \langle a, b \mid ab = 1\rangle$. This monoid is not residually finite (see chapter 5 of [18] by Lallement), and so Proposition 3.3.1 (respectively 3.3.2) below implies that B is not a submonoid of any expanding automaton semigroup (respectively boundary expanding automaton semigroup). Let S be a semigroup with elements a, b, c such that c is an identity in the subsemigroup generated by a, b, and c, and suppose that $ab = c$. Clifford and Preston show in Corollary 1.32 of [5] that if $ba \neq c$ then the submonoid generated by a, b, and c is the bicyclic monoid. We summarize these observations in the following remark.

Remark 3.1.2. Let S be an expanding automaton semigroup or boundary expanding

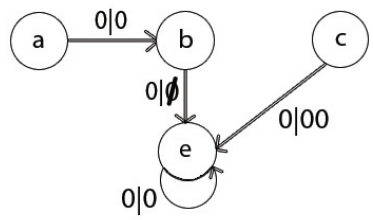

Figure 3.1: The automaton from Proposition 3.1.3

automaton semigroup. Then the bicyclic monoid is not a submonoid of S. In particular, if M is a submonoid of S then an element $m \in M$ is left invertible in M if and only if m is right invertible in M.

We use this remark to distinguish the class of expanding automaton semigroups from the class of asynchronous automaton semigroups.

Proposition 3.1.3. *The class of expanding automaton semigroups is strictly contained in the class of asynchronous automaton semigroups.*

Proof. Let $\mathcal{A}$ be the asynchronous automaton over the alphabet $\{0\}$ with four states defined by

$$a = [0](b), \quad b = [\emptyset](e), \quad c = [00](e), \quad e = [0](e).$$

Figure 3.1 gives the graphical representation of $\mathcal{A}$. Note that $e(0^n) = 0^n$ for all $n \in \mathbb{N}$, so e is an identity element of $S(\mathcal{A})$. Note also that by construction $ac(0^n) = 0^n = e(0^n)$ for any n, but $ca(0) = 00$. Thus $ac = e$ but $ca \neq e$ in $S(\mathcal{A})$. So Corollary 1.32 of [5] implies that the submonoid generated by a and c is the bicyclic monoid, and Remark 3.1.2 implies that $S(\mathcal{A})$ is not an expanding automaton semigroup. □

Proposition 3.1.4. *The class of expanding automaton semigroups is strictly contained in the class of boundary expanding automaton semigroups.*

Proof. First we show containment. Let $\mathcal{A} = (Q, \Sigma, t, o)$ be an expanding automaton. Let x be a symbol not in Σ, and let $\Sigma' = \Sigma \cup \{x\}$. We construct a new automaton $\mathcal{B} = (Q, \Sigma', t', o')$ such that $S(\mathcal{B}) \cong S(\mathcal{A})$ and $\partial S(\mathcal{B}) \cong S(\mathcal{B})$. If $(q, \sigma) \in Q \times \Sigma$, define $t'(q, \sigma) = t(q, \sigma)$. For each $q \in Q$, let $t'(q, x) = q$. Similarly, for each $(q, \sigma) \in Q \times \Sigma$ let $o'(q, \sigma) = o(q, \sigma)$ and $o'(q, x) = x$. Then $S(\mathcal{B}) \cong S(\mathcal{A})$. Let $q_1, q_2 \in Q^*$ be distinct elements of $S(\mathcal{A})$. Then there is a $w \in \Sigma^*$ such that $q_1(w) \neq q_2(w)$. Now $q_1(wx^\omega) = q_1(w)x^\omega \neq q_2(w)x^\omega = q_2(wx^\omega)$, and so q_1 and q_2 are distinct elements of $\partial S(\mathcal{B})$. Since $\partial S(\mathcal{B})$ is a quotient of $S(\mathcal{B})$, we have shown that $S(\mathcal{B}) \cong \partial S(\mathcal{B})$.

To see that the containment is strict, we show that the free semigroup of rank 1 with a zero adjoined is a boundary automaton semigroup. This will give us our result, as we show in Proposition 3.4.2 below that this semigroup is not an expanding automaton semigroup.

Consider the automaton given by the wreath decomposition $a = [01, 11](b, a), b = [01, 01](b, b)$. Then the range of b in $\{0, 1\}^\omega$ is $(01)^\omega$. By construction, a fixes this point, and so $ab = b$. Since the range of b is a single point, $ba = b$. Finally, note that a is not periodic as $a^n(1(01)^\omega) = 1^{2^n}(01)^\omega$, i.e. $1(01)^\omega$ has an infinite forward orbit under the action of a. Thus the boundary expanding automaton semigroup generated by a and b is the free semigroup of rank 1 with a zero adjoined. □

Proposition 3.1.5. *The class of boundary expanding automaton semigroups is strictly contained in the class of boundary asynchronous automaton semigroups.*

Proof. It is clear by definition that the class of boundary expanding automaton semigroups is contained in the class of boundary asynchronous automaton semigroups. By Proposition 3.3.2 below, boundary expanding automaton semigroups are residually finite. Grigorchuk et al. give in [13] an asynchronous automaton $\mathcal{A}$ such that the boundary semigroup is Thompson's group F (see Figure 23 of [13]). It is well known

that F is an infinite simple group, and hence not residually finite. □

Proposition 3.1.6. *The class of asynchronous automaton semigroups is contained in the class of boundary asynchronous automaton semigroups.*

Proof. The logic and constructions are the same as that of Proposition 3.1.4. □

At this time, we do not have an example of a boundary asynchronous automaton semigroup that is not an asynchronous automaton semigroup, so the question of whether or not the containment of classes is strict is still open. Also, we are unsure of the relationship between the class of boundary expanding automaton semigroups and asynchronous automaton semigroups. Boundary expanding automaton semigroups are residually finite (see Proposition 3.3.2) while asynchronous automaton semigroups need not be (see the proof of Proposition 3.1.3 and recall that the bicyclic monoid is not residually finite), so the classes are not equal.

3.2 Decision Properties and Dynamics

We begin this section by showing that expanding automaton semigroups have richer boundary dynamics than automaton semigroups. Proposition 3.2.1 restricts the kind of action that an automaton semigroup can have on the boundary of a tree, and Example 3.2.2 gives an expanding automaton semigroup which shows that this restriction does not extend to the dynamics of these semigroups. Example 3.2.2 also provides a realization of the free semigroup of rank 1 as an expanding automaton semigroup. Proposition 4.3 of [4] shows that the free semigroup of rank 1 is not an automaton semigroup, so Example 3.2.2 provides another example of an expanding automaton semigroup that is not an automaton semigroup. Let S be a semigroup acting on a set X, and $s \in S$. We say that $x \in X$ is a *fixed point of* s if $s(x) = x$.

Proposition 3.2.1. *Let S be an automaton semigroup with corresponding automaton $\mathcal{A} = (Q, \Sigma, t, o)$. If every state of $\mathcal{A}$ has at least two fixed points in Σ^ω, then every state of $\mathcal{A}$ has infinitely many fixed points in Σ^ω.*

Proof. We begin with some terminology. We call a path p in $\mathcal{A}$ an *inactive path* if each edge on p has the form $\sigma|\sigma$ for some $\sigma \in \Sigma$.

Let $q \in Q$. Since $\mathcal{A}$ is a synchronous automaton, q acts in a length-preserving fashion. Since q has a fixed point in Σ^ω, in the finite automaton $\mathcal{A}$ there must exist an inactive circuit c_1 accessible from q via an inactive path p (q must fix a word letter-by-letter). Let q_1 be a state on c_1. As q_1 must also have two fixed points in Σ^ω, either there is another inactive circuit containing q_1 or there is another inactive circuit accessible from q_1 via an inactive path. In either case, q has infinitely many fixed points in Σ^ω by using each of the inactive circuits an arbitrary number of times. $\square$

Example 3.2.2. (Thue-Morse Automaton): This example is constructed to model the substitution rules which give the Thue-Morse sequence. This infinite binary sequence, denoted (T_i), is the limit of 0 under iterations of the substitution rules $0 \to 01, 1 \to 10$. The complement of the Thue-Morse sequence, denoted $(\overline{T_i})$, is the limit of 1 under iterations of these substitution rules. For more information on these sequences, see Section 2.2 of [19] by Lothaire.

Consider the expanding automaton $\mathcal{A}$ given by $a = (a, a)[01, 10]$ over the alphabet $\Sigma = \{0, 1\}$. First note that $S(\mathcal{A})$ is the free semigroup of rank 1. To see this, by construction of $\mathcal{A}$ we have $|a^n(0)| = 2^n$ for all n, and thus $a^m \neq a^n$ for any $m \neq n$.

Also by construction of $\mathcal{A}$, the action of $S(\mathcal{A})$ has exactly two fixed points in $\{0, 1\}^\omega$: (T_i) and $(\overline{T_i})$. To see this, first notice that (T_i) and $(\overline{T_i})$ are the fixed points of a (see section 2.1 of [19]). Thus (T_i) and $(\overline{T_i})$ are fixed points of a^n for any n. Furthermore, $a^n = \tau_{a^n}(a^n, a^n)$ where τ_{a^n} maps 0 to the prefix of length 2^n of (T_i) and

maps 1 to the prefix of length 2^n of $(\overline{T_i})$. Thus section 2.1 of [19] implies that a^n has exactly two fixed points for all n.

We now turn to showing that undecidability arises in the dynamics of these semigroups.

Theorem 3.2.3. *1. There is no algorithm which takes as input an expanding automaton $\mathcal{A} = (Q, \Sigma, t, o)$ and states $q_1, q_2 \in Q$ and decides whether or not there is a word $w \in \Sigma^+$ with $q_1(w) = q_2(w)$.*

2. There is no algorithm which takes as input an expanding automaton $\mathcal{A} = (Q, \Sigma, t, o)$ and states $q_1, q_2 \in Q$ and decides whether or not there is an infinite word $\eta \in \Sigma^\omega$ such that $q_1(\eta) = q_2(\eta)$.

Proof. We show undecidability by embedding the Post Correspondence Problem. Let $X = \{x_1, ..., x_m\}$ be an alphabet, and let $V = (v_1, ..., v_n)$ and $W = (w_1, ..., w_n)$ be two lists of words over X. Let $Y = \{1, ..., n\} \subseteq \mathbb{N}$ and $Z = \{z_1, z_2\}$ be alphabets such that $X \cap Y \cap Z = \emptyset$. Undecidability of the Post Correspondence Problem implies that, in general, we cannot decide if there is a sequence $(y_1, ..., y_t)$ of elements of Y such that $v_{y_1} v_{y_2} ... v_{y_t} = u_{y_1} u_{y_2} ... u_{y_t}$.

We build an expanding automaton $\mathcal{A}_{X,V,W}$ over the alphabet $\Sigma := X \cup Y \cup Z$ as follows. Let the state set Q of $\mathcal{A}_{X,V,W}$ be $\{a, b\}$, and let

$$t(q, \sigma) = q \text{ for all } q \in Q, \sigma \in \Sigma$$

$$o(a, i) = v_i \text{ for } 1 \leq i \leq n, \quad o(a, \sigma) = z_1 \text{ for } \sigma \in \Sigma - Y$$

$$o(b, i) = w_i \text{ for } 1 \leq i \leq n, \quad o(b, \sigma) = z_2 \text{ for } \sigma \in \Sigma - Y$$

Figure 3.2 shows $\mathcal{A}_{X,U,W}$ where $X = \{s, t\}$, $V = (st, ts^2, t^2)$, and $W = (s^2, tsts, t^2 s)$.

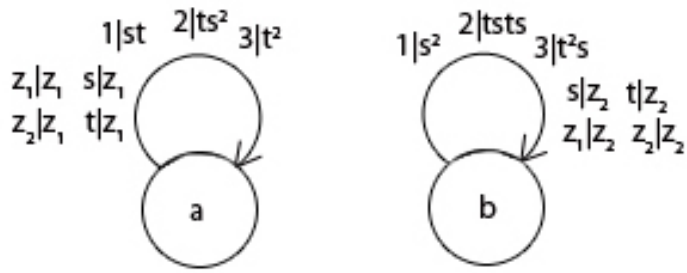

Figure 3.2: The automaton $\mathcal{A}_{X,U,W}$ where $X = \{s,t\}$, $V = (st, ts^2, t^2)$, and $W = (s^2, tsts, t^2s)$

Note that for any $w \in \Sigma^*$, $a(w)$ does not contain the letter z_2; similarly, $b(w)$ does not contain the letter z_1. Now if $w \in \Sigma^*$ contains a letter of $X \cup Z$, then we know $a(w) \neq b(w)$ since $a(w)$ contains the letter z_1 and $b(w)$ contains the letter z_2. Thus if there is a word $w \in \Sigma^*$ such that $a(w) = b(w)$, then $w \in Y^*$. By construction of $\mathcal{A}_{X,V,W}$, if $y = y_1y_2...y_n \in Y^*$ and $a(y) = b(y)$, then $v_{y_1}v_{y_2}...v_{y_t} = u_{y_1}u_{y_2}...u_{y_t}$. Thus the expanding automaton $\mathcal{A}_{X,V,W}$ simulates Post's problem, and since we cannot decide the Post Correspondence Problem, we cannot decide if there is a word $w \in Y^*$ with $a(w) = b(w)$. This proves part (1).

It is shown by Rouhonen in [25] that the infinite Post Correspondence Problem is undecidable. That is, there is no algorithm that takes as input two lists of words $v_1, ..., v_n$ and $w_1, ..., w_n$ over an alphabet X and decides if there is an infinite sequence $(i_k)_{k=1}^{\infty}$ such that $v_{i_1}v_{i_2}... = w_{i_1}w_{i_2}...$. Thus, using the same expanding automata and logic as above, (2) is proven. $\square$

We now show that undecidability arises when trying to understand the fixed point sets of elements of asynchronous automaton semigroups. If $w \in A^*$ for a set A, let $\mathrm{Pref}_k(w)$ denote the prefix of w of length k.

Definition 3.2.4. Let A^* be a free monoid. A subset $C \subseteq A^*$ is a **prefix code** if

1. C is the basis of a free submonoid of A^*

2. If $c \in C$, then $\mathrm{Pref}_k(c) \notin C$ for all $1 \leq k \leq |C|$

The *prefix code Post correspondence problem* is a stronger form of the Post Correspondence Problem. The input of the prefix code Post Correspondence Problem is two lists of words $v_1, ..., v_n$ and $w_1, ..., w_n$ over an alphabet X such that $\{v_1, ..., v_n\}$ and $\{w_1, ..., w_n\}$ are prefix codes. A solution to the problem is a sequence of indices $(i_k)_{1 \leq k \leq m}$ with $1 \leq i_k \leq n$ such that $v_{i_1}...v_{i_m} = w_{i_1}...w_{i_m}$. Rouhonen also shows in [25] that this form of Post's problem is undecidable. We use the prefix code Post problem to prove the following:

Theorem 3.2.5. *1. There is no algorithm that takes as input an asynchronous automaton $\mathcal{A}$ over an alphabet Σ and a state q of $\mathcal{A}$ and decides whether or not q has a fixed point in Σ^+, i.e. decides if there is a word $w \in \Sigma^+$ such that $q(w) = w$.*

2. There is no algorithm that takes as input an asynchronous automaton $\mathcal{A}$ over an alphabet Σ and a state q of $\mathcal{A}$ and decides whether or not q has a fixed point in Σ^ω, i.e. decides if there is an infinite word $\eta \in \Sigma^\omega$ such that $q(\eta) = \eta$.

Proof. Let Σ be an alphabet, and let $C, D \subseteq \Sigma^*$ be prefix codes where $C = \{c_1, ..., c_m\}$ and $D = \{d_1, ..., d_m\}$. Let $\mathcal{A}_{\Sigma,C,D}$ be the expanding automaton with states c, d that we constructed in the proof of Proposition 3.2.3. Then $\mathcal{A}_{\Sigma,C,D}$ is an expanding automaton over the alphabet $X := \{1, ..., m\} \cup \Sigma \cup \{z_1, z_2\}$ such that $o(c, i) = c_i$ and $o(d, i) = d_i$. We build an asynchronous automaton $\mathcal{B}$ over the alphabet X with a state c' such that $c'c$ is the identity function from $\{1, ..., m\}^*$ to $\{1, ..., m\}^*$. We know that there is a function $c' : \Sigma^* \to \{1, ..., m\}^*$ such that $c'c$ is the identity because $\{c_1, ..., c_m\}$ generates a free monoid, so c induces an injection from $\{1, ..., m\}^*$ to Σ^*.

We begin construction of $\mathcal{B}$ by starting with a single state c', and then attaching a loop based at c' such that the input letters of the loop read the word c_1 when read starting at c'. We define the corresponding output word, when read starting at c', to be $(\emptyset)^{|c_1|-1}1$. In other words, the first $|c_1| - 1$ edges of the loop have the form $x|\emptyset$, and the last edge of the loop has the form $x|1$. Next, we attach a loop at c' such that the input letters of the loop when read starting at c' read the word c_2, and the corresponding output word is $(\emptyset)^{|c_2|-1}2$. If c_1 ad c_2 have a non-trivial common prefix, then the resulting automaton with two loops is not deterministic. In this case, we "fold" the maximum length common prefixes together, resulting in a deterministic automaton. We iteratively continue this process until we can read the words $c_1, ..., c_m$ as input words starting at c', and $c'(c_i) = i$ for all i. Note that we can do this process since c_i is not a prefix of c_j for any $i \neq j$. At this step in the construction of $\mathcal{B}$, $\mathcal{B}$ is a partial asynchronous automaton, i.e. given a state of q of $\mathcal{B}$, the domain of q is not all of X^*. However, we do have $c'c$ is the identity function $\{1, ..., m\}^* \to \{1, ..., m\}^*$ by construction of $\mathcal{B}$. In order to make $\mathcal{B}$ an asynchronous automaton, for each state q in $\mathcal{B}$ and each letter $x \in X$ such that $t(q, x)$ is undefined, let $t(q, x) = q$ and $o(q, x) = \emptyset$.

Recall that in the proof of Theorem 3.2.3, in general we cannot find $w \in \{1, ..., m\}^*$ such that $c(w) = d(w)$ because such a w is a solution to the Post Correspondence Problem. By construction of $\mathcal{B}$, any $w \in \{1, ..., m\}^*$ such that $c'd(w) = w = c'c(w)$ is a solution to the prefix code Post Correspondence Problem. Now $c'd$ is an element of the asynchronous automaton semigroup generated by the states of $\mathcal{A}_{\Sigma,C,D}$ and $\mathcal{B}$. Thus, undecidability of the prefix code Post Correspondence Problem implies part (1).

In [25], Ruohonen shows that the that there is no algorithm which takes as input two lists of words $v_1, ..., v_n$ and $w_1, ..., w_n$ over an alphabet Σ such that $\{v_1, ..., v_n\}$ and $\{w_1, ..., w_n\}$ are prefix codes and decides whether there is an infinite sequence of

indices $(i_k)_{k=1}^{\infty}$ such that $v_{i_1}v_{i_2}... = w_{i_1}w_{i_2}....$ Thus the same logic and automata as above implies part (2). $\square$

We now give an algorithm which determines whether or not an element of an expanding automaton semigroup induces an injection $\mathcal{T}(\Sigma^*) \to \mathcal{T}(\Sigma^*)$. Before we do this, we must recall some basic automata theory which can be found in more detail in Chapters 1 and 2 of [17] by Hopcroft and Ullman. In order to avoid ambiguity of language, we will use the phrase "nondeterministic finite state automaton with $\emptyset$ moves" to denote a 5-tuple $(Q, \Sigma, \delta, q_0, F)$ where Q is a state set, Σ is an alphabet, δ is a partial relation from $Q \times (\Sigma \cup \{\emptyset\})$ to Q, q_0 is an initial state, and F is a set of final states. Let "deterministic finite state automaton" denote a 5-tuple $(Q, \Sigma, \delta, q_0, F)$ where Q is a state set, Σ is an alphabet, δ is a partial function from $Q \times \Sigma$ to Q, q_0 is an initial state, and F is a set of final states. We view a finite state automaton as a finite directed graph with vertex set Q and an arrow from q_1 to q_2 labeled by σ if and only if $\delta(q_1, \sigma) = q_2$.

Let $M = (Q, \Sigma, \delta, q_0, F)$ be a nondeterministic finite state automaton with $\emptyset$ moves. Given a state $q \in Q$, let the $\emptyset$-*closure of* q, denoted $\emptyset$CLOSE(q), be the set of states that are accessible from q via a path whose edges are labeled by $\emptyset$.

Given a finite state automaton $M = (Q, \Sigma, \delta, q_0, F)$, call a directed edge path p an *acceptable path* in M if p begins at q_0 and ends at a final state. If M is a nondeterministic finite state automaton with $\emptyset$ moves, let $\phi_M : \{\text{acceptable paths in M}\} \to L(M)$ (where $L(M)$ denotes the language accepted by M) denote the map which sends a path p to the word in $L(M)$ that labels the path p. If M is deterministic then ϕ_M is injective. We show in the following lemma that we can decide if ϕ_M is injective for a nondeterministic finite state automaton M.

Lemma 3.2.6. *Let M be a nondeterministic finite state automaton with $\emptyset$ moves.*

Then there is algorithm that decides whether or not ϕ_M is injective.

Proof. Let $M = (Q, \Sigma, \delta, q_o, F)$ be a nondeterministic finite state automaton with $\emptyset$ moves. We build a deterministic finite state automaton $M' = (Q', \Sigma, \delta', q_0', F')$ from M using a construction of Hopcroft and Ullman from Section 2.5 of [17].

Let the state set Q' be the power set of Q, $q_0' = \emptyset\text{CLOSE}(q_0)$, and $F' = \{S \in Q' \mid \text{there exists } q \in S \text{ such that } q \in F\}$. Lastly,

$$\delta'(\{q_1, ..., q_k\}, \sigma) = \emptyset\text{CLOSE}(\{\delta(q_1, \sigma), ..., \delta(q_k, \sigma)\}).$$

Then, by construction of M', ϕ_M is not injective if and only if in M' there is an edge $\{r_1, ..., r_t\} \xrightarrow{\sigma} \{s_1, ..., s_v\}$ accessible from $\{q_0\}$ such that one of the following three conditions hold: i) there exist distinct r_{i_1}, r_{i_2} with $\delta(r_{i_j}, \sigma) \in F$, ii) there exist distinct r_{i_1}, r_{i_2} such that $\delta(r_{i_1}) = \delta(r_{i_2})$ and there is a final state accessible from $\delta(r_{i_1})$ in M, or iii) there is an r_j such that in M there are two edges coming out of r_j labeled by σ whose terminal vertices are final states. $\square$

Proposition 3.2.7. *There is an algorithm which takes as input an asynchronous automaton $\mathcal{A} = (Q, \Sigma, t, o)$ and an element $w \in Q^*$ and decides whether or not $w : \Sigma^* \to \Sigma^*$ is injective.*

Proof. Let $\mathcal{A} = (Q, \Sigma, t, o)$ be an asynchronous automaton and let $w \in Q^*$. Using Equation 2.2, construct an asynchronous automaton $\mathcal{B} = (\hat{Q}, \Sigma, \hat{t}, \hat{o})$ with w as a state of $\mathcal{B}$.

First we build a finite state automaton $M = (Q', \Sigma, \delta, q_0, F)$ from $\mathcal{B}$. Begin with state set Q' in bijection with $\hat{Q}$. Whenever $q_1 \xrightarrow{\sigma|w} q_2$ in $\mathcal{B}$ with $w = v_1...v_k$ where $v_i \in \Sigma$, add enough states in M so that there is a path labeled by $v_1...v_k$ from q_1' to q_2'. Intuitively, M is the finite state automaton we get from $\mathcal{B}$ by dropping the inputs

off of the edges in $\mathcal{B}$, then making each edge into a path so that every edge in M is labeled by an element of Σ. Let $F = Q'$ and $q_0 = q'$. Note that w is not injective if and only if there exist distinct paths in $\mathcal{B}$ such that the outputs read along each path give the same element of Σ^*. Now M is constructed so that for each $w \in \text{range}(q)$ there exists an acceptable path p in M such that $\phi_M(p) = w$, and given an acceptable path p' in M we have $\phi_M(p') \in \text{range}(q)$. Furthermore, each acceptable path in M corresponds to an input path in $\mathcal{A}$. Thus w is not injective if and only if there exist two distinct paths p_1 and p_2 in M such that $\phi_M(p_1) = \phi_M(p_2)$. By lemma 3.2.6, there is an algorithm to decide this property of M. $\square$

In [13], Grigorchuk et al. give an infinite version of the above proposition. More precisely, they show the following.

Proposition 3.2.8 (**Lemma 2.19 of [13]**). *There is an algorithm which takes as input an asynchronous automaton $\mathcal{A} = (Q, \Sigma, t, o)$ and an element $w \in Q^*$ and decides if the transformation w induces from Σ^ω to Σ^ω is injective.*

The set of expanding automaton semigroups such that the states induce injective functions is very restricted. Let S be an expanding automaton semigroup with corresponding automaton $\mathcal{A} = (Q, \Sigma, t, o)$ such that each state $q \in Q$ induces an injection $\mathcal{T}(\Sigma^*) \to \mathcal{T}(\Sigma^*)$. Then any element of Q^* also induces an injection $\mathcal{T}(\Sigma^*) \to \mathcal{T}(\Sigma^*)$. Let $e \in S$, and suppose that e is idempotent. Since e is idempotent, e fixes range(e). If $w \in \Sigma^*$ is such that $e(w) \neq w$, then w and $e(w)$ are both preimages of $e(w)$ under e. Since e induces an injection, we have that e is the identity function on $\mathcal{T}(\Sigma^*)$. Let e_Σ denote the identity function on $\mathcal{T}(\Sigma^*)$. Then S can contain at most one idempotent, namely e_Σ. If $e_\Sigma \in S$, then Proposition 3.3.6 implies that the group of units of S is self-similar. Suppose that $e_\Sigma \notin S$. Then S contains no idempotents and hence any $s \in S$ is non-periodic.

Suppose that there is an $s \in S$ such that there exists a word $w \in \Sigma^*$ with $|w| < |s(w)|$. Then, because each element of S is injective and elements of S cannot shorten word length when acting on Σ^*, there cannot be an element $s' \in S$ such that $ss's = s$. A semigroup T is said to be *von Neumann regular* if for each $t \in T$ there is a $t' \in T$ with $tt't = t$. Then S is not von Neumann regular. Thus we have shown the following.

Proposition 3.2.9. *Let S be an expanding automaton semigroup over an expanding automaton $\mathcal{A} = (Q, \Sigma, t, o)$ such that each q induces an injective function $\mathcal{T}(\Sigma^*) \to \mathcal{T}(\Sigma^*)$. Then*

1. *The group of units of S is self-similar.*
2. *S is von Neumann regular if and only if $\mathcal{A}$ is an invertible automaton and S is a group.*
3. *If $e \in S$ is idempotent then $e = e_\Sigma$.*
4. *If $e_\Sigma \notin S$, then S does not contain any periodic elements.*

3.3 Algebraic Properties

3.3.1 Residual Finiteness and Periodicity

In this section we show that expanding automaton semigroups are residually finite and that the periodicity structure of these semigroups is restricted.

Proposition 3.3.1. *Expanding automaton semigroups are residually finite.*

Proof. Let S be an expanding automaton semigroup over the alphabet Σ and let $a, b \in S$ with $a \neq b$. For each $m \in \mathbb{N}$, let $L(m) = \{w \in \Sigma^* \ : \ |w| = m\}$, i.e. $L(m)$ is

the mth level of the tree Σ^*. Since a and b are distinct, there is $n \in \mathbb{N}$ such that a and b act differently on $L(n)$. Let

$$n' = \max\{|a(w)|, |b(w)| \ : \ w \in L(n)\}$$

and let $\mathcal{L} = \left(\bigcup_{i=1}^{n'} L(i)\right) \cup \{\$\}$. Finally, let $T(\mathcal{L})$ denote the semigroup of transformations $\mathcal{L} \to \mathcal{L}$. Since $\mathcal{L}$ is finite, $T(\mathcal{L})$ is a finite semigroup. Define a homomorphism $\rho : S \to T(\mathcal{L})$ by $\rho(s) = f$ where $f(\$) = \$$ and

$$f(x) = \begin{cases} s(x) & s(x) \in \mathcal{L} \\ \$ & s(x) \notin \mathcal{L} \end{cases}$$

Since a and b act differently on $L(n)$, construction of ρ ensures that $\rho(a)$ and $\rho(b)$ are distinct in $T(\mathcal{L})$. □

Proposition 3.3.2. *Boundary expanding automaton semigroups are residually finite.*

Proof. Let $\mathcal{A} = (Q, \Sigma, t, o)$ be an expanding automaton. Let $q_1, q_2 \in Q^*$ such that q_1, q_2 are distinct elements of $\partial S(\mathcal{A})$. Then there is an $\eta \in \Sigma^\omega$ such that $q_1(\eta) \neq q_2(\eta)$, and so there is a $w \in \Sigma^*$ such that w is a prefix of η and $q_1(w) \neq q_2(w)$. Using the same logic and homomorphism as in the previous proposition, we can construct a finite semigroup S and a homomorphism $\partial S(\mathcal{A}) \to S$ separating q_1 and q_2. □

Let G be an automaton group over an alphabet Σ and let P_Σ denote the set of prime numbers that divide $|\Sigma|!$. If $g \in G$ has finite order, then the order of g must have only primes from P_Σ in its prime factorization. One can see this by considering g as a level-preserving automorphism on a tree of degree $|\Sigma|$, and thus the cardinality of any orbit under the action of g must have only prime numbers dividing $|\Sigma|!$ in its prime factorization. We show an analogous proposition for the periodicity structure

of expanding automaton semigroups. First, we define a *partial invertible automaton* to be a quadruple (Q, Σ, t, o) where t is a partial function from $Q \times \Sigma$ to Q and o is a partial function from $Q \times \Sigma$ to Σ such that the restricted partial function o_q from $\{q\} \times \Sigma$ to Σ is a partial permutation of Σ. It is straightforward to show that any partial invertible automaton can be "completed" to an invertible automaton, i.e. given a partial invertible automaton $\mathcal{B}$ there is an invertible automaton $\mathcal{A}$ (not necessarily unique) such that $\mathcal{B}$ embeds (via a labeled graph homomorphism) into $\mathcal{A}$.

Proposition 3.3.3. *Let S be an expanding automaton semigroup over an alphabet Σ, and let P_Σ be as above. If $s \in S$ is periodic with $s^m = s^n$, $m < n$, and $s, ..., s^{n-1}$ distinct, then $n - m$ has only primes from P_Σ in its prime factorization.*

Proof. Let $\mathcal{A} = (Q, \Sigma, t, o)$ be an expanding automaton with $S = S(\mathcal{A})$. Suppose $s \in S$ is periodic with $s^m = s^n$, $m < n$, and $s, ..., s^{n-1}$ distinct. Fix $w \in s^m(\Sigma^*)$. Then $R_w := \{s^k(w) \mid k \geq m\}$ is a finite set, and the cardinality of R_w divides $n - m$. Note that for any $w' \in R_w$, s acts like a cycle on w' as $s^m(w') = s^n(w')$. Furthermore, if $v, v' \in R_w$ then $|v| = |v'|$ because s cannot shorten word length. Thus the paths in $\mathcal{A}$ corresponding to the input words $s^m(w), ..., s^{n-1}(w)$ form a partial invertible subautomaton of $\mathcal{A}$. Denote this partial invertible subautomaton by β_w. Consider the partial invertible subautomaton β of $\mathcal{A}$ given by $\beta = \cup_{w \in \Sigma^*}(\beta_w)$. Complete β to an invertible automaton β'. Then R_w is an orbit under the action of an element of an automaton group for all $w \in \Sigma^*$, and the result follows. $\square$

3.3.2 Subgroups

Recall from Section 2.2 that if $\mathcal{A}$ is an invertible synchronous automaton, then $\mathcal{A}^{-1}$ denotes the inverse automaton of $\mathcal{A}$.

Proposition 3.3.4. *A group G is an automaton group (respectively self-similar group) if and only if G is an expanding automaton semigroup (respectively expanding self-similar semigroup).*

Proof. Let G be an automaton group corresponding to the automaton $\mathcal{A} := (Q, \Sigma, t, o)$. Since G is an automaton group, $\mathcal{A}$ is invertible and synchronous. Construct a new automaton $\mathcal{B} = \mathcal{A} \cup \mathcal{A}^{-1}$. Then $S(\mathcal{B}) = G$ and $\mathcal{B}$ is an expanding automaton. Thus G is an expanding automaton semigroup.

Conversely, let the group G be an expanding automaton semigroup corresponding to the expanding automaton $\mathcal{A} = (Q, \Sigma, t, o)$. Let e be the identity of G and $g \in G$. Then

$$e(\Sigma^*) = g(g^{-1}(\Sigma^*)) \subseteq g(\Sigma^*)$$

and

$$g(\Sigma^*) = e(g(\Sigma^*)) \subseteq e(\Sigma^*)$$

Hence $e(\Sigma^*) = g(\Sigma^*)$. Now e is idempotent and thus fixes $e(\Sigma^*)$, so (as in the proof of 3.1.2) g is bijective and length-preserving on $g(\Sigma^*) = e(\Sigma^*)$. Thus G is isomorphic to the semigroup generated by $\{g|_{e(\Sigma^*)} \ : \ g \in G\}$.

Construct an invertible automaton $\mathcal{B} = (\overline{Q} \cup \{1\}, \Sigma = \{\sigma_1, ..., \sigma_n\}, \bar{t}, \bar{o})$ as follows. The state set is $\overline{Q} \cup \{i\}$ where $\overline{Q}$ is a set in bijection with Q and $i = (i, ..., i)[\sigma_1, ..., \sigma_n]$, i.e. i is a sink state that pointwise fixes Σ^*. The transition function is given by

$$\overline{t(q, \sigma)} = \begin{cases} t(q, \sigma) & \text{if } \sigma \in e(\Sigma) \\ i & \text{if } \sigma \notin e(\Sigma) \end{cases}$$

and the output function is given by

$$\overline{o(q,\sigma)} = \begin{cases} o(q,\sigma) & \text{if } \sigma \in e(\Sigma) \\ \sigma & \text{if } \sigma \notin e(\Sigma) \end{cases}$$

Let $g \in G$ and let $w \in \Sigma^* - e(\Sigma^*)$ be of minimal length. Write $w = v\sigma$ where $v \in e(\Sigma^*)$. Then the above conditions imply that, for any $w' \in \Sigma^*$, $\hat{q}(ww') = q(w)\sigma w'$. In other words, each state $\overline{q}$ of $\mathcal{B}$ will mimic the action of q on words that are in the image of e, but will enter the state i and act identically on the suffix of a word w following the largest prefix of w lying in $e(\Sigma^*)$. So the part of the action which does not act bijectively and in a length-preserving fashion collapses to the identity, and we have an invertible automaton giving G.

None of the above uses that the automata have finitely many states, so the same logic shows that G is a self-similar group if and only if G is an expanding self-similar semigroup. □

The idea in the last proof allows us to prove the following:

Proposition 3.3.5. *Let S be an expanding automaton semigroup and H a subgroup of S. Then there is a self-similar group G with $H \leq G$.*

Proof. Let S be an expanding automaton semigroup and H a subgroup of S. Let e denote the identity of H. Let $\mathcal{A} = (Q, \Sigma, t, o)$ be the expanding automaton associated with S. As in the proof of Proposition 3.3.4, H is isomorphic to the semigroup generated by $\{h|_{e(\Sigma^*)} \ : \ h \in H\}$ and each element of H acts injectively and in length-preserving fashion on $e(\Sigma^*)$. Then we can again collapse the "non-group" part of the action to the state which fixes the tree to get a length-preserving and invertible action of H. Thus we can construct an invertible (and possibly infinite state) synchronous

automaton containing the elements of H as states. The states generated by this automaton is a self-similar group G with $H \leq G$. $\square$

If S is an expanding automaton semigroup and H is a subgroup of S, then S is a subgroup of a self-similar group, but H is not necessarily self-similar. If H is the unique maximal subgroup of S, then we show below that H is self-similar.

Proposition 3.3.6. *Let S be an expanding automaton semigroup with a unique maximal subgroup G. Then G is self-similar.*

Proof. Let $\mathcal{A} = (Q, \Sigma, t, o)$ be the automaton associated with S. Let $g \in G$ and write $g = (g_1, ...g_n)\tau_g$ where $n = |\Sigma|$. Let e be the identity of G, and write $e = (e_1, ..., e_n)\tau_e$. Since e is idempotent, e fixes range(e), and thus the set $\hat{\Sigma} := \{\sigma \in \Sigma \mid e(\sigma) = \sigma\}$ is non-empty. To see this, let $\sigma \in \Sigma$ and suppose that $e(\sigma) = \sigma' w$ for some $\sigma' \in \Sigma$. Then e fixes $\sigma' w$, and since e is length-expanding $e(\sigma') = \sigma'$. Since e is idempotent, $e_{\hat{\sigma}}$ is idempotent for all $\hat{\sigma} \in \hat{\Sigma}$. This is true because $(e^n)_{\hat{\sigma}} = (e_{\hat{\sigma}})^n$. Since G is the unique maximal subgroup of S, there is only one idempotent element of S. Thus $e_{\hat{\sigma}} = e$ for all $\hat{\sigma} \in \hat{\Sigma}$.

Let $\sigma \in \hat{\Sigma}$. Then $\tau_g(\sigma) \in \hat{\Sigma}$ and so $e_{\tau_g(\sigma)} = e$. Thus Equation (2.2) implies

$$g_\sigma = (eg)_\sigma = e_{\tau_g(\sigma)} g_\sigma$$

and, as e stabilizes σ,

$$g_\sigma = (ge)_\sigma = g_\sigma e_\sigma.$$

Hence $eg_\sigma = g_\sigma e = g_\sigma$ for any $\sigma \in \hat{\Sigma}$.

Let $h = g^{-1}$, $\sigma \in \hat{\Sigma}$, and write $h = (h_1, ..., h_n)\tau_h$. By the same logic as above,

$eh_\sigma = h_\sigma e = h_\sigma$. Since $hg = e$ we have

$$(hg)_\sigma = h_{\tau_g(\sigma)} g_\sigma = e_\sigma = e$$

Since g_σ is left-invertible, Proposition 3.1.2 implies that g_σ is invertible. Therefore $g_\sigma \in G$ for all $\sigma \in \hat{\Sigma}$.

Continuing inductively, we see that $g_w \in G$ for all $w \in \text{range}(e)$. Similar to the proof of Proposition 3.3.4, if $w \notin \text{range}(e)$ then for all $g \in G$ we can replace g_w with e and the resulting group will still be isomorphic to G. This is because, as in Proposition 3.3.4, the action of G on range(e) captures all of the group information. Thus G is an expanding self-similar semigroup, and Proposition 3.3.4 implies that G is a self-similar group. □

If $\mathcal{A}$ is an invertible synchronous automaton, then $S(\mathcal{A})$ has at most one idempotent, namely the identity function on the tree. Thus Proposition 3.3.6 has the following corollary.

Corollary 3.3.7. *Let $\mathcal{A}$ be an invertible synchronous automaton. Then the group of units of $S(\mathcal{A})$ is self-similar.*

3.4 Closure Properties and further examples

3.4.1 Closure Properties

We begin this section by showing that the class of expanding automaton semigroups is not closed under taking normal ideal extensions.

Let S and T be semigroups. The *normal ideal extension of S by T* is the disjoint union of S and T with multiplication of two elements of S or two elements of T as

before and for any $s \in S$ and $t \in T$, define $st = ts = t$. If S is a semigroup, then S with a zero adjoined is the normal ideal extension of S by $\{0\}$. Thus adjunction of a zero element is an example of a normal ideal extension.

The free semigroup of rank 1 is an expanding automaton semigroup (see Example 3.2.2, for example). We show that the free semigroup of rank 1 is not an expanding automaton semigroup, which shows that the class of expanding automaton semigroups is not closed under taking normal ideal extensions.

Let S and T be semigroups. The *normal ideal extension of S by T* is the disjoint union of S and T with multiplication of two elements of S or two elements of T as before and for any $s \in S$ and $t \in T$, define $st = ts = t$.

Lemma 3.4.1. *The free semigroup of rank 1 with a zero adjoined is not an automaton semigroup.*

Proof. Let S be an automaton semigroup over an alphabet $\Sigma = \{\sigma_1, ..., \sigma_n\}$ such that S is generated by two elements a and b with $ab = ba = b$ and $b^2 = b$. We use the same idea of the proof of Proposition 3.1.1 to show that a is periodic.

Let $\sigma \in \Sigma$. Suppose that the section of a at $a^n(\sigma) = b$ for some n. Then $(a^n)_\sigma = (a^{n+k})_\sigma$ for all $k \in \mathbb{N}$. If the section of a at $a^n(\sigma)$ is a power of a for all n, then (as in the proof of Proposition 3.1.1) the section of a at $a^n(\sigma)$ is a for all n.

Let $\hat{\Sigma} = \{\sigma \in \Sigma \mid (a^r)_\sigma = b \text{ for some } r\}$. As in the proof of Proposition 3.1.1, we can choose s and t such that $\tau_{a^s} = \tau_{a^t}$ and $(a^s)_\sigma = (a^t)_\sigma$ for all $\sigma \in \hat{\Sigma}$. Then the same logic of the proof of Proposition 3.1.1 shows that $a^s = a^t$. $\square$

We now apply Lemma 3.4.1 to show the following.

Proposition 3.4.2. *The class of expanding automaton semigroups is not closed under taking normal ideal extensions. In particular, the free semigroup of rank 1 with a zero adjoined is not an expanding automaton semigroup.*

Proof. Let $S = \langle a, b \mid b^2 = b,\ ab = ba = b\rangle$ be the free semigroup of rank 1 with a zero adjoined, and suppose S were an expanding automaton semigroup corresponding to the automaton $\mathcal{A} = (Q, \Sigma, t, o)$. Since b is idempotent, b fixes range(b). Hence the set $\hat{\Sigma} = \{\sigma \in \Sigma \mid b(\sigma) = \sigma\}$ is non-empty. Since b is the only idempotent of S, $b_{\hat{\sigma}} = b$ for all $\hat{\sigma} \in \hat{\Sigma}$.

Let $\sigma \in \Sigma - \hat{\Sigma}$, and suppose that $b_\sigma = a^n$ for some $n > 0$. Let $w \in \Sigma^*$. Then $b(\sigma w) = b(\sigma)a^n(w)$. Since b fixes range(b), we have that $b(b(\sigma w)) = b(\sigma)a^n(w)$. We also have that b fixes $b(\sigma)$ and the section of b at $b(\sigma)$ is b. Thus b fixes $a^n(w)$, and (as w is arbitrary) $ba^n = a^n$ in S. But $ba^n = b$, which implies that a^n is idempotent. Since a^n is not idempotent in S, we have $b_\sigma = b$ for all $\sigma \in \Sigma$. Note that b must be a state of $\mathcal{A}$ as powers of a cannot multiply to obtain b. Thus, in the graphical representation of $\mathcal{A}$, all edges going out of b are loops based at b. Note also that a must be a state of $\mathcal{A}$.

Let $\Gamma = \{\sigma \in \Sigma \ :\ |a^m(\sigma)| = 1 \text{ for all } m\}$. The equation $ab = b$ implies that a fixes range(b), and so Γ is nonempty. In $\mathcal{A}$, for each state q in $\langle a\rangle$ and $\gamma \in \Gamma$ there is an arrow labeled by $\gamma|\hat{\gamma}$ coming out of q where $\hat{\gamma} \in \Gamma$. Let $w \in \Gamma^*$ with $w = \gamma_1 ... \gamma_k$. Suppose that $|a(w)| > 1$. Then w, as a path in $\mathcal{A}$ based at a, must enter the state b. Choose i maximal so that $\gamma_1 ... \gamma_{i-1}$ is a path such that the initial vertex of each edge is not the state b. Then $a(w) = \gamma'_1 ... \gamma'_k$ where $\gamma'_m \in \Gamma$ for $1 \leq m \leq i-1$ and $\gamma'_m \in \hat{\Sigma}^*$ for $i \leq m \leq k$. Since a fixes $\hat{\Sigma}^*$, $|a^n(w)| = |a^2(w)|$ for all $n \geq 2$. Thus for any $w \in \Gamma^*$, $|a^{|\Sigma|}(w)| = |a^k(w)|$ for any $k \geq |\Sigma|$.

Suppose that $|a(\sigma)| = 1$ for all $\sigma \in \Sigma$. Then the same logic as in the proof of Proposition 3.1.1 shows that either a is periodic or has infinitely many sections (note that the proof does not use that the periodic element acts in a length-preserving fashion). So the set $\Sigma' = \{\sigma \in \Sigma \ :\ |a(\sigma)| > 1\}$ is nonempty. Let $\sigma' \in \Sigma'$, and write $a(\sigma') = \sigma_1 ... \sigma_m$ where $\sigma_i \in \Sigma$. Suppose that $\sigma_i = \sigma'$ for some i. Then $b(a(\sigma')) =$

$b(\sigma_1...\sigma_n) = b(\sigma_1)...b(\sigma_m) = b(\sigma')$, and so $|b(a(\sigma'))| > |b(\sigma')|$, a contradiction. Thus σ' is not a letter of $a(\sigma')$. The same calculation also shows that σ' is not a letter of $a^n(\sigma')$ for any n and that σ' is not a letter of $a(\sigma_i)$ for any i.

Let $w \in \Sigma^*$ and write $w = \sigma_1...\sigma_k$. Suppose that $\sigma_i \notin \Gamma$ for some i. Then every edge in $\mathcal{A}$ with input label σ_i has an output label without σ_i as a letter. Thus $a^n(w)$ does not contain σ_i as a letter for any n. If $a(w) \in \Gamma^*$, then as mentioned above a will act in a length-preserving fashion on $a^{|\Sigma|}(w)$. Suppose that $a(w) \notin \Gamma^*$ where $\sigma_j \notin \Gamma$ is a letter of $a(w)$. Then $a^2(w)$ does not contain σ_i or σ_j as a letter. Continuing inductively, we see that $a^{|\Sigma|}(w) \in \Gamma^*$. Thus there is an $m \in \mathbb{N}$ such that a acts in a length-preserving fashion on $a^m(w)$ for any $w \in \Sigma^*$, i.e. $|a^m(w)| = |a^k(w)|$ for $k \geq m$ and any $w \in \Sigma^*$. This induces a length-preserving action of S on Γ^*, contradicting Lemma 3.4.1. $\square$

Proposition 3.4.3. *Let S and T be asynchronous automaton semigroups. Then the normal ideal extension of S by T is an asynchronous automaton semigroup.*

Proof. Let $\mathcal{A} = (Q_1, \Sigma, t_1, o_1)$ and $\mathcal{B} = (Q_2, \Gamma, t_2, o_2)$ be asynchronous automata with $S(\mathcal{A}) = S$ and $S(\mathcal{B}) = T$. Construct a new automaton $\mathcal{C} = (Q_1 \cup Q_2, \Sigma \cup \Gamma, t, o)$ with transition and output functions as follows:

$$t(q_1, \sigma) = t_1(q_1, \sigma) \text{ for all } q_1 \in Q_1 \text{ and } \sigma \in \Sigma$$

$$t(q_1, \gamma) = q_1 \text{ for all } q_1 \in Q_1 \text{ and } \gamma \in \Gamma$$

$$t(q_2, \sigma) = q_2 \text{ for all } q_2 \in Q_2 \text{ and } \sigma \in \Sigma$$

$$t(q_2, \gamma) = t_2(q_2, \gamma) \text{ for all } q_2 \in Q_2 \text{ and } \gamma \in \Gamma$$

$$o(q_1, \sigma) = o_1(q_1, \sigma) \text{ for all } q_1 \in Q_1 \text{ and } \sigma \in \Sigma$$

$$o(q_1, \gamma) = \gamma \text{ for all } q_1 \in Q_1 \text{ and } \gamma \in \Gamma$$

$$o(q_2, \sigma) = \emptyset \text{ for all } q_2 \in Q_2 \text{ and } \sigma \in \Sigma$$

$$o(q_2, \gamma) = o_2(q_2, \gamma) \text{ for all } q_2 \in Q_2 \text{ and } \gamma \in \Gamma$$

By construction of $\mathcal{C}$, the subsemigroup of $S(\mathcal{C})$ generated by Q_1 is S and the subsemigroup of $S(\mathcal{C})$ generated by Q_2 is T.

Now let $w \in (\Sigma \cup \Gamma)^*$. Write $w = \sigma_1\gamma_1\sigma_2\gamma_2...\sigma_n\gamma_n$ with $\sigma_i \in \Sigma^*$ and $\gamma_j \in \Gamma^*$. Let $s \in Q_1^*$ and $t \in Q_2^*$. Then

$$ts(w) = t(s(\sigma_1)\gamma_1 s(\sigma_2)\gamma_2...s(\sigma_n)\gamma_n) = \emptyset t(\gamma_1)\emptyset t(\gamma_2)...t(\gamma_n) = t(\gamma_1)t(\gamma_2)...t(\gamma_n)$$

and

$$st(w) = s(t(\gamma_1)t(\gamma_2)...t(\gamma_n)) = t(\gamma_1)t(\gamma_2)...t(\gamma_n)$$

Thus both $st(w)$ and $ts(w)$ equal $t(w)$, so $st = ts = t$. □

We close this section by showing that the class of expanding automaton semigroups is closed under direct product, provided the direct product is finitely generated.

Proposition 3.4.4. *Let S and T be expanding automaton semigroups. Then $S \times T$ is an expanding automaton semigroup if and only if $S \times T$ is finitely generated.*

Proof. An expanding automaton semigroup must be finitely generated, so the forward direction is clear. Suppose that $S \times T$ is finitely generated. Then $S \times T$ is generated by $A \times B$ for some finite $A \subseteq S$ and $B \subseteq T$. Let $\mathcal{A}_S$ and $\mathcal{A}_T$ be expanding automata with state sets P and Q respectively such that $S = S(\mathcal{A}_S)$ and $T = S(\mathcal{A}_T)$. Furthermore, choose m, n so that $A \subseteq P^m$ and $B \subseteq Q^n$, and add enough states to each expanding automaton so that we obtain new automata $\mathcal{A}'_S$ and $\mathcal{A}'_T$ with $S = S(\mathcal{A}'_S)$, $T = S(\mathcal{A}'_T)$,

and P^m is contained in the state set of $\mathcal{A}'_S$; likewise for Q^n and $\mathcal{A}'_T$. Write $\mathcal{A}'_S = (X', C, t', o')$ and $\mathcal{A}'_T = (Y', D, \hat{t}, \hat{o})$. with C and D disjoint.

Let $\mathcal{Y} = (X' \cup Y', C \cup D, t, o)$ be the expanding automaton defined by

$$t(q,\sigma) = \begin{cases} t'(q,\sigma) & q \in X' \text{ and } \sigma \in C \\ q & q \in X' \text{ and } \sigma \in D \\ \hat{t}(q,\sigma) & q \in Y' \text{ and } \sigma \in D \\ q & q \in Y' \text{ and } \sigma \in C \end{cases} \quad \text{and} \quad o(q,\sigma) = \begin{cases} o'(q,\sigma) & q \in X' \text{ and } \sigma \in C \\ \sigma & q \in X' \text{ and } \sigma \in D \\ \hat{o}(q,\sigma) & q \in Y' \text{ and } \sigma \in D \\ \sigma & q \in Y' \text{ and } \sigma \in C \end{cases}.$$

Then the subsemigroup of $S(\mathcal{Y})$ generated by X' is S and the subsemigroup of $S(\mathcal{Y})$ generated by Y' is T, and construction of $\mathcal{Y}$ implies that $x'y' = y'x'$ for all $x' \in X'$ and $y' \in Y'$. Thus $S(\mathcal{Y}) \cong S \times T$. $\square$

Let S and T be finitely generated semigroups such that T is infinite. Robertson, Ruškuc, and Wiegold show in [24] that if S is finite then $S \times T$ is finitely generated if and only if $S^2 = S$. If S is infinite, then $S \times T$ is finitely generated if and only if $S^2 = S$ and $T^2 = T$. Let $\mathbb{N}$ denote the free semigroup of rank 1. Then $\mathbb{N}^2 \neq \mathbb{N}$, and thus $\mathbb{N} \times \mathbb{N}$ is not an expanding automaton semigroup (even though $\mathbb{N}$ is an expanding automaton semigroup).

3.4.2 Rees Congruences on Automaton Semigroups

Let S be a semigroup and I an ideal of S. Define an equivalence relation ρ on S by $x\rho y$ if and only if either $x = y$ or both x and y are in I. We call ρ the *Rees congruence on S with respect to I*. Then the *Rees quotient of S with respect to I*, denoted S/I, is the semigroup S/ρ. In other words, the Rees quotient on S with respect to I is the semigroup induced by the Rees congruence with respect to I. For more detail on

Rees quotients, see [5] by Clifford and Preston.

Let S be a residually finite semigroup and I and ideal of S. Then S/I need not be residually finite (see [10], where Golubov exhibits an example of a residually finite inverse semigroup which has a non-residually finite Rees quotient), so in general there is little hope that the class of automaton semigroups is closed under passing to Rees quotients. However, this leaves open the possibility that the class of automaton semigroups is closed under passing to residually finite Rees quotients. In particular, we wanted to answer the following question: Let S be an automaton semigroup and I a principal ideal of S such that S/I is residually finite; is S/I an automaton semigroup? We show below that the answer is no. In fact, for any $m \in \mathbb{N}$ there are an $n \geq m$, an automaton semigroup S_m, and an ideal I_n of S_n such that I_n is generated by n elements, S_m/I_n is residually finite, and S_m/I_m is not an automaton semigroup.

In order to demonstrate such semigroups, we show that the semigroups with semigroup presentation $S_n = \langle X \mid R \rangle$ such that $X = \{x_1, ..., x_n, 0\}$ and

$$R = \{(x_i x_j, 0) \mid i \neq j\}$$

are not automaton semigroups. All of these semigroups are residually finite, and S_n is a Rees quotient of the free commutative semigroup of rank n. It is known that these semigroups are residually finite, since Maltcev has shown that any finitely generated commutative semigroup is residually finite (see [20]). We give a proof below for completeness.

Proposition 3.4.5. *The semigroup S_n is residually finite for all n.*

Proof. We show this for the semigroup S_2, as the proof for the others is similar. Let $S_2 = \langle a, b, 0 \mid ab = ba = 0 \rangle$. Then $S = \{a^m, b^n, 0 \mid m, n \in \mathbb{N}\}$. Let $a^r, b^s \in S$. Consider

the finite semigroup $T_{r,s} = \langle c, d, 0 \mid c^r = c^{r+1}, d^s = d^{s+1}, cd = dc = 0\rangle$. Then the map $\phi : S_2 \to T_{r,s}$ determined by $\phi(a) = c, \phi(b) = d$, and $\phi(0) = 0$ is a homomorphism that separates a^r and b^s. $\square$

Proposition 3.4.6. *The class of automaton semigroups is not closed under passing to residually finite Rees quotients. In particular, for any $m \in \mathbb{N}$ there are an $n \geq m$, an automaton semigroup S_m, and an ideal I_n of S_n such that I_n is generated by n elements, S_m/I_n is residually finite, and S_m/I_n is not an automaton semigroup.*

Proof. This proposition is true as S_n is not an automaton semigroup for any n. We show that S_2 is not an automaton semigroup, as the argument for the other semigroups is similar.

Let S be an automaton semigroup with automaton $\mathcal{A} = (Q, \Sigma, t, o)$ such that S is generated by three elements a, b, and 0 where 0 is a zero element and $ab = ba = 0$, and suppose that a and b are non-periodic elements of S. We show that both a and b are periodic elements of S, obtaining a contradiction.

Let $\hat{\Sigma}_a = \{\sigma \in \Sigma \mid a_{a^m(\sigma)} \in \langle a\rangle \text{ or } a_{a^m(\sigma)} \in \langle b\rangle \text{ for all } m \in \mathbb{N}\}$. In other words, $\hat{\Sigma}_a$ is the set of all $\sigma \in \Sigma$ such that $(a^m)_\sigma$ is not 0 in S for all $m \in \mathbb{N}$. Since $ab = ba = 0$ in S, this implies that if $\sigma \in \hat{\Sigma}_a$ then for all m the section of a at $a^m(\sigma)$ is always a power of a or always a power of b. Define $\hat{\Sigma}_b$ similarly. Note that, as $ab = ba = 0$ in S, if $\sigma \notin \hat{\Sigma}_a$ then there is an $n \in \mathbb{N}$ such that $(a^n)_\sigma = 0$. Furthermore, note that since a and b are assumed to be non-periodic, both $\hat{\Sigma}_a$ are $\hat{\Sigma}_b$ are non-empty.

Let $\sigma \in \hat{\Sigma}_a$ and suppose that a_σ is a power of a. Note that if for all $m \in \mathbb{N}$ then the section of a at $a^m\sigma$ is a power of a then the section of a at $a^m\sigma$ is a (otherwise the a is not a state of a finite automaton). We now break into cases.

Case 1: Let $\sigma \in \hat{\Sigma}_a$. Suppose that a_σ is a power of b for some $\sigma \in \hat{\Sigma}_a$. Then by definition of $\hat{\Sigma}_a$ the section of a at $a^m(\sigma)$ is a power of b for all $m \in \mathbb{N}$.

Subcase 1a: Suppose that there exists a $\beta \in \{a^m(\sigma) \mid m \in \mathbb{N}\}$ such that $a_\beta = b^r$ with $r > 1$. Since b is non-periodic, choose a $\delta \in \hat{\Sigma}_b$. Suppose that $b_\delta = a^s$ for some $s \in \mathbb{N}$. Then $a_{\beta\delta} = a^{s_1}$, where $s_1 > s$. Now $a_{\beta\delta\beta} = b^{r_1}$, where $r_1 > r$. Thus $a_{\beta\delta\beta\delta} = a^{s_2}$ where $s_2 > s_1$. Continuing this process, we see that a cannot be a state of a finite automaton. Thus, in this case where there exists $\beta \in \{a^m(\sigma) \mid m \in \mathbb{N}\}$ such that $a_\beta = b^r$ where $r > 1$, b_δ cannot be a power of a if $\delta \in \hat{\Sigma}_b$. Thus $b_\delta = b$ for all $\delta \in \hat{\Sigma}_b$.

Choose $r_1, r_2 \in \mathbb{N}$ with $r_1 < r_2$ such that $(b^{r_1})_\sigma = 0$ for all $\sigma \notin \hat{\Sigma}_b$ and $\tau_b^{r_1} = \tau_b^{r_2}$. Then, for any word w which contains a letter of $\Sigma - \hat{\Sigma}_b$, then $(b^{r_1})_w = (b^{r_2})_w = 0$. If $w \in (\hat{\Sigma}_b)^*$, then $(b^n)_w = b^n$ and so choice of r_1 and r_2 implies that $\tau_{(b^{r_1})_w} = \tau_{(b^{r_2})_w}$. Thus $b^{r_1} = b^{r_2}$, and b is periodic.

Since b is periodic, choose $t_1, t_2 \in \mathbb{N}$ such that $b^{t_1} = b^{t_2}$, $(a^{t_1})_\delta = 0$ for all $\delta \in \Sigma - \hat{\Sigma}_a$, and $\tau_a^{t_1} = \tau_a^{t_2}$. Then, as in the proof of 3.1.1, $a^{t_1} = a^{t_2}$.

Subcase 1b: Suppose that there exists a $\beta \in \{a^m(\sigma) \mid m \in \mathbb{N}\}$ such that $a_\beta = b$, and, for any $r > 1$, $a_\delta \neq b^r$ for all $\delta \in \hat{\Sigma}_a$. Suppose that there exists $\delta' \in \hat{\Sigma}_b$ such that $b_{\delta'} = a^r$ where $r > 1$. Then, as above, a is not a state of a finite automaton. Thus, for all $\sigma' \in \hat{\Sigma}_b$, $b_{\sigma'}$ is either a or b. Choose $r_1, r_2 \in \mathbb{N}$ with $r_1 < r_2$ such that $(a^{r_1})_\eta = 0$ for all $\eta \in \Sigma - \hat{\Sigma}_a$, $(b^{r_1})_\rho = 0$ for all $\rho \in \Sigma - \hat{\Sigma}_b$, $\tau_a^{r_1} = \tau_a^{r_2}$, and $\tau_b^{r_1} = \tau_b^{r_2}$. Then $a^{r_1} = a^{r_2}$ and $b^{r_1} = b^{r_2}$.

Case 2: Suppose that $a_\sigma = a$ for all $\sigma \in \hat{\Sigma}_a$. Choose r_1 and r_2 with $r_1 < r_2$ such that $(a^{r_1})_\sigma = 0$ for all $\sigma \notin \hat{\Sigma}_a$ and $\tau_a^{r_1} = \tau_a^{r_2}$. Then, as above, $a^{r_1} = a^{r_2}$. This is a mirror case of Subcase 1b, which implies that b is also periodic.

Thus S_2 is not an automaton semigroup. The proof that S_n is not an automaton semigroup follows exactly the same logic, showing that all generators are periodic. Let $\mathbb{N}^m$ denote the free commutative semigroup of rank m. Then $S_m = \mathbb{N}^m / I_n$, where I_n is the ideal generated by $x_i x_j$ for all i, j. $\square$

3.4.3 Free Partially Commutative Monoids and Semigroups

In this section we show that every free partially commutative monoid is an automaton semigroup, and we show that every free partially commutative semigroup is an expanding automaton semigroup. A *free partially commutative monoid* is a monoid with monoid presentation $\langle x_1, ..., x_n \mid R\rangle$ where $R \subseteq \{(x_i x_j, x_j, x_i) \mid 1 \leq i, j \leq n\}$. A *free partially commutative semigroup* is defined analogously.

Let M be a free partially commutative monoid with monoid presentation $\langle X|R\rangle$. We begin by defining the *shortlex normal form* on M. First, if $v \in X^*$, $|v|$ will always denote the length of v in X^*. Order the set X by $x_i < x_j$ whenever $i < j$. If $v, w \in X^*$, let $v < w$ if and only if $|v| < |w|$ or, if $|v| = |w|$, v comes before w in the dictionary order induced by the order on X. This is called the *shortlex ordering* on X^*. To obtain the set of shortlex normal forms of M, for each $w \in M$ choose a word $w' \in X^*$ such that $w = w'$ in M and w' is minimal in X^* with respect to the shortlex ordering. We remark that it is immediate from this definition that a word $w \in X^*$ is in shortlex normal form in M if and only if for all factorizations $x = ybuaz$ in M where $y, u, z \in X^*$, a and b commute, and $a < b$, there is a letter of u which does not commute with a.

For any $w \in X^*$, let $w(x_i, x_j)$ denote the word obtained from w by erasing all letters except x_i and x_j. We write $w(x_i)$ to denote the word obtained from w by deleting all occurrences of the letter x_i. We will need the following lemma regarding free partially commutative monoids.

Lemma 3.4.7. *Let M be a free partially commutative monoid generated by $X = \{x_1, ..., x_n\}$, and let $v, w \in X^*$ such that v and w are in shortlex normal form in M. Suppose that*

1. $|v(x_i)| = |w(x_i)|$ *for* $1 \leq i \leq n$ *and*

2. $v(x_i, x_j) = w(x_i, x_j)$ *in* X^* *whenever* $1 \leq i, j \leq n$ *and* x_i *and* x_j *do not commute.*

Then $v = w$ *in* M*.*

Proof. Let $v, w \in M$ be words satisfying $|v(x_i)| = |w(x_i)|$ for all i. This implies that the number of occurrences of x_i as a letter of v equals the number of occurrences of x_i as a letter of w. In particular, $|v| = |w|$. Write $v = x_{i_1}...x_{i_k}$ and $w = x_{j_1}...x_{j_k}$ with v, w in shortlex normal form. Suppose that $x_{i_1} < x_{j_1}$. Then $v(x_{i_1}, x_{j_1}) \neq w(x_{i_1}, x_{j_1})$ in X^*, and condition (2) in the hypotheses implies that x_{i_1} and x_{j_1} commute. Condition (1) implies that x_{j_1} is a letter of v and x_{i_1} is a letter of w, and so we write $v = x_{i_1}v_1x_{j_1}v_2$ where v_1 does not contain x_{j_1} as a letter. Similarly, write $w = x_{j_1}w_1x_{i_1}w_2$. Condition (2) implies that x_{i_1} commutes with every letter of w_1. Since $x_{i_1} < x_{j_1}$, we have that w was not in lexicographic normal form. Thus $x_{i_1} \not< x_{j_1}$, and symmetry implies $x_{j_1} \not< x_{i_1}$. So $x_{i_1} = x_{j_1}$. Inductively continuing the argument implies that $x_{i_t} = x_{j_t}$ for all $1 \leq t \leq k$. □

Theorem 3.4.8. *Every free partially commutative monoid is an automaton semigroup.*

Proof. Let M be a partially commutative monoid generated by $X = \{x_1, ..., x_n\}$. Let $N = \{\{i, j\} \mid x_i \text{ and } x_j \text{ do not commute}\}$. Let $A = \{a_1, ..., a_n\}$, $B = \{b_1, ..., b_n\}$, $C = \{c_{ij} \mid i < j \text{ and } \{i, j\} \in N\}$, and $D = \{d_{ij} \mid i < j \text{ and } \{i, j\} \in N\}$ be four alphabets where C, D are in bijective correspondence with N. We construct an automaton $\mathcal{A}_M$ with state set $Q := \{y_1, ..., y_n, 1\}$ over the alphabet $\Sigma = A \cup B \cup C \cup D$ such that $S(\mathcal{A}_M) \cong M$ as follows. Let 1 be the sink state that pointwise fixes Σ^*.

For each i, define

$$t(y_i, a_j) = 1 \text{ for all } j, \quad t(y_i, b_j) = \begin{cases} y_i & i = j \\ 1 & i \neq j \end{cases}$$

and

$$o(y_i, a_j) = \begin{cases} b_j & i = j \\ a_j & i \neq j \end{cases}, \quad o(y_i, b_j) = \begin{cases} a_j & i = j \\ b_j & i \neq j \end{cases}.$$

By construction, the subautomaton consisting of the states y_i and 1 over the alphabet $\{a_i, b_i\}$ is the *adding machine* automaton (see Figure 1.3 of [22]) for all i. Note that for any $k > j$, $y_i^j(a_i^{2j}) \neq y_i^k(a^{2j})$, and so the semigroup corresponding to this subautomaton is the free monoid of rank 1 for all i. Thus each y_i acts non-periodically on $\{a_i, b_i\}^*$ for all i. Furthermore, if $i \neq j$ then y_j induces the identity function from $x\Sigma^*$ to $x\Sigma^*$ where $x \in \{a_i, b_i\}$.

We now complete the construction of $\mathcal{A}$. Fix $i < j$ with $\{i, j\} \in N$, and let $k \in \mathbb{N}$ such $1 \leq k \leq n$ and $k \neq i, j$. Define

$$t(y_i, c_{ij}) = y_j, \quad t(y_i, d_{ij}) = y_i, \quad t(y_j, c_{ij}) = y_i, \quad t(y_j, d_{ij}) = y_j$$

$$o(y_i, c_{ij}) = d_{ij}, \quad o(y_i, d_{ij}) = c_{ij}, \quad o(y_j, c_{ij}) = c_{ij}, \quad o(y_j, d_{ij}) = d_{ij}$$

$$t(y_k, c_{ij}) = t(y_k, d_{ij}) = 1$$

$$o(y_k, c_{ij}) = c_{ij}, \quad t(y_k, d_{ij}) = d_{ij}.$$

For all other i', j' such that $\{i', j'\} \subseteq N$ and $i' < j'$, define the output and transition function analogously. Figure 3.3 gives the automaton $\mathcal{A}_M$ where M is the free partially commutative monoid $\langle y_1, y_2, y_3 \mid y_1y_2 = y_2y_1,\ y_1y_3 = y_3y_1 \rangle$ (we omit the arrow on the

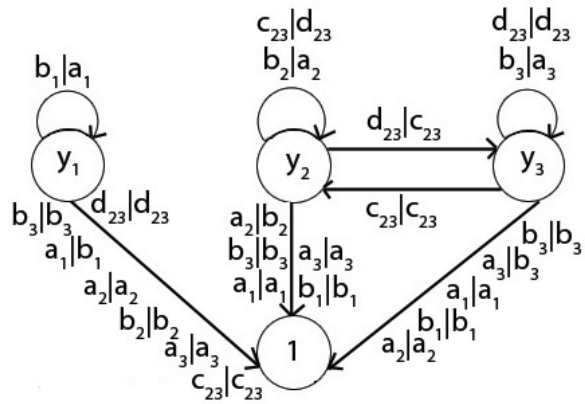

Figure 3.3: An automaton generating the monoid $\langle y_1, y_2, y_3 \mid y_1y_2 = y_2y_1,\ y_1y_3 = y_3y_1\rangle$

sink state).

For each $\{i, j\} \in N$, the subautomaton of $\mathcal{A}_M$ corresponding to the states y_i and y_j over the alphabet $\{c_{ij}, d_{ij}\}$ is the "lamplighter automaton" (see Figure 1.1 of [16]). Grigorchuk and Zuk show in Theorem 2 of [16] that this automaton generates the lamplighter group, and in particular in Lemma 6 of [16] they show that the states of this automaton generate a free semigroup of rank 2. Thus y_i and y_j generate a free semigroup of rank 2 when acting on $\{c_{ij}, d_{ij}\}^*$, and hence the semigroup generated by y_i and y_j in $S(\mathcal{A}_M)$ is free of rank 2.

Let $1 \leq i, j \leq n$ be such that $\{i, j\} \not\subseteq N$. By construction of $\mathcal{A}_M$, y_i and y_j have disjoint support, i.e. the sets $\{w \in \Sigma^* \mid y_i(w) \neq w\}$ and $\{w \in \Sigma^* \mid y_j(w) \neq w\}$ are disjoint. Thus if x_i and x_j commute in M, then y_i and y_j commute in $S(\mathcal{A}_M)$. So $S(\mathcal{A}_M)$ is a quotient of M.

Let $v, w \in Q^*$ such that v and w are written in shortlex normal form when considered as elements of M. Suppose that $w(y_i) \neq v(y_i)$ for some i. By construction of $\mathcal{A}_M$, for any $i \neq j$ we have y_j acts as the identity function on $\{a_i, b_i\}^*$. Thus the action of v and w on $\{a_i, b_i\}^*$ is the same as the action of $v(y_i)$ and $w(y_i)$, respectively, on $\{a_i, b_i\}^*$. So $w(y_i) \neq v(y_i)$ implies that $v \neq w$ in $S(\mathcal{A}_M)$. Hence $v = w$ in $S(\mathcal{A}_M)$

implies that $w(y_i) = v(y_i)$ for all i.

Suppose now that there exist $\{r, s\} \in N$ such that $v(y_r, y_s) \neq w(y_r, y_s)$. If $t \neq r, s$, then y_t acts like the identity function on $\{c_{rs}, d_{rs}\}^*$. Thus the action of v and w on $\{c_{rs}, d_{rs}\}^*$ is the same as the action of $v(y_r, y_s)$ and $w(y_r, y_s)$, respectively, on $\{c_{rs}, d_{rs}\}^*$. So $v(y_r, y_s) \neq w(y_r, y_s)$ implies that $v \neq w$ in $S(\mathcal{A}_{\mathcal{M}})$. Thus if $v = w$ in $S(\mathcal{A}_{\mathcal{M}})$ then $v(y_r, y_s) = w(y_r, y_s)$ in Q^* for all $\{r, s\} \in N$.

The last two paragraphs have shown that if $v = w$ in $S(\mathcal{A}_{\mathcal{M}})$, then v and w satisfy the hypotheses of Lemma 3.4.7. Hence $v = w$ in M, and the result follows. □

We now turn to showing that each partially commutative semigroup is an expanding automaton semigroup. Let $\mathcal{A}_2 = (Q = \{a, b\}, \Sigma = \{0, 1, 2, 3, 4\}, t, o)$ be an expanding automaton with transition function defined by $t(x, \sigma) = x$ for all $x \in Q$ and $\sigma \in \Sigma$, and output function defined by

$$o(a, 0) = 00,\ o(b, 0) = 10,\ o(a, 1) = 1,\ o(b, 1) = 1$$

$$o(a, 2) = 3,\ o(b, 2) = 4,\ o(a, 3) = 3,\ o(b, 3) = 3,\ o(a, 4) = 4,\ o(b, 4) = 4$$

We show below in lemma 3.4.10 that the semigroup generated by a and b is free. Before we do this, we need the following technical lemma.

Lemma 3.4.9. *Let $m_1, ..., m_k, n_1, ..., n_{k-1}, p_1, ..., p_r, q_1, ..., q_{r-1} \in \mathbb{N}$ and $n_k, q_r \in \mathbb{N} \cup \{0\}$. Then, in $\{0, 1\}^*$,*

$$(1^{n_1}(1^{n_2}(...(1^{n_{k-1}}(1^{n_k}0)^{2^{m_k}})^{2^{m_{k-1}}})...)^{2^{m_1}} = (1^{q_1}(1^{q_2}(...(1^{q_{k-1}}(1^{q_k}0)^{2^{p_k}})^{2^{p_{k-1}}})...)^{2^{p_1}}$$

if and only if $m_i = p_i$ and $n_i = q_i$ for all i.

Proof. Suppose that we have $m_1, ..., m_k, n_1, ..., n_{k-1}, p_1, ..., p_r, q_1, ..., q_{r-1} \in \mathbb{N}$ and

$n_k, q_r \in \mathbb{N} \cup \{0\}$ such that

$$w := (1^{n_1}(1^{n_2}(...(1^{n_{k-1}}(1^{n_k}0)^{2^{m_k}})^{2^{m_{k-1}}})...)^{2^{m_1}} = (1^{q_1}(1^{q_2}(...(1^{q_{k-1}}(1^{q_k}0)^{2^{p_k}})^{2^{p_{k-1}}})...)^{2^{p_1}}$$

in $\{0,1\}^*$. Let $t_1 = (\sum_{i=1}^{k-1} n_i)$ and $t_2 = (\sum_{i=1}^{r-1} q_i)$. Then

$$w = 1^{t_1}(1^{n_k}0)^{2^{m_k}}1^{n_{k-1}}(1^{n_k}0)^{2^{m_k}}... = 1^{t_2}(1^{q_r}0)^{2^{p_r}}1^{q_{r-1}}(1^{q_r}0)^{2^{p_r}}...$$

Thus $n_k = q_r$ and $m_k = p_r$. The above equation also shows that $n_{k-1} = q_{r-1}$ as $n_k + n_{k-1} = q_r + q_{r-1}$. Looking at longer prefixes of w will show our result. □

Lemma 3.4.10. *$S(\mathcal{A}_2)$ is the free semigroup of rank 2.*

Proof. Let $m_1, ..., m_k, n_1...n_{k-1} \in \mathbb{N}$ and $n_k \in \mathbb{N} \cup \{0\}$. Then a straightforward induction on $\sum_{i=1}^{k}(m_i + n_i)$ shows that

$$b^{n_k}a^{m_k}...b^{n_1}a^{m_1}(0) = (1^{n_1}(1^{n_2}(...(1^{n_{k-1}}(1^{n_k}0)^{2^{m_k}})^{2^{m_{k-1}}})...)^{2^{m_1}}$$

Thus Lemma 3.4.9 implies that

$$a^{m_1}b^{n_1}...a^{m_k}b^{n_k} = a^{p_1}b^{q_1}...a^{p_r}b^{q_r}$$

if and only if $m_i = p_i$ and $n_j = q_j$ for all i, j. So if $v, w \in S(\mathcal{A}_2)$ with $v = av'$ and $w = aw'$ where $v', w' \in \{a, b\}^*$, then $v = w$ in $S(\mathcal{A}_2)$ if and only if $v' = w'$ in $\{a, b\}^*$.

Suppose now that $v, w \in \{a, b\}^*$ and $v = av', w = bw'$ where $v', w' \in \{a, b\}^*$. Then $v(2) = 3$ and $w(2) = 4$, so $v \neq w$ in $S(\mathcal{A}_2)$.

Lastly, Consider $v = b^{m_1}a^{n_1}...b^{m_k}a^{n_k} \in \{a, b\}^*$ where $m_1, ..., m_k, n_1, ..., n_{k-1} \in \mathbb{N}$

and $n_k \in \mathbb{N} \cup \{0\}$. Then a straightforward induction on $\sum_{i=1}^{k}(m_i + n_i)$ shows that

$$v(0) = 1^{m_1}(1^{m_2}(...(1^{m_{k-1}}(1^{m_k}0^{2^{n_k}})^{2^{n_{k-1}}})...)2^{n_1}$$

The same logic found in the proof of Lemma 3.4.9 can be used to show that, in $\{0,1\}^*$,

$$1^{m_1}(1^{m_2}(...(1^{m_{k-1}}(1^{m_k}0^{2^{n_k}})^{2^{n_{k-1}}})...)2^{n_1} = 1^{p_1}(1^{p_2}(...(1^{p_{r-1}}(1^{p_r}0^{2^{q_r}})^{2^{q_{r-1}}})...)2^{q_1}$$

if and only if $m_i = p_i$ and $n_j = q_j$ for all i, j. Thus, in $S(\mathcal{A}_2)$,

$$b^{m_1}a^{n_1}...b^{m_k}a^{n_k} = b^{p_1}a^{q_1}...b^{p_r}a^{q_r}$$

if and only if $m_i = p_i$ and $n_j = q_j$ for all i, j.

So if $w, v \in S(\mathcal{A}_2)$ are equal in $S(\mathcal{A}_2)$ then they are equal in $\{a, b\}^*$, and we have our result. □

Lemma 3.4.10 allows us to prove the following:

Theorem 3.4.11. *Every partially commutative semigroup is an expanding automaton semigroup.*

Proof. Let $S(X)$ be a partially commutative semigroup with generating set $X = \{x_1, ..., x_n\}$. Let $A = \{(i, j) \mid x_i \text{ and } x_j \text{ do not commute}\}$, $B = \{\beta_1, ..., \beta_n\}$ be a set in one-to-one correspondence with the elements of X, and let $Q = \{y_1, ..., y_n\}$ be a state set. For each $(i, j) \in A$ introduce an alphabet $\Sigma_{ij} := \{\sigma_{ij}^0, ..., \sigma_{ij}^4\}$. Let

$$\Sigma = \bigcup_{(i,j)\in A} (\Sigma_{ij}) \cup B$$

be an alphabet. We now construct an expanding automaton $\mathcal{A} = (Q, \Sigma, t, o)$ such that $S(\mathcal{A}) \cong S(X)$ under the mapping $y_i \to x_i$ for all i. The transition function of $\mathcal{A}$ is defined by $(y_i, \sigma) = y_i$ for all $1 \leq i \leq n$ and $\sigma \in \Sigma$. Fix $(i, j) \in A$. We begin defining the output function as follows:

$$o(y_i, \sigma_{ij}^0) = \sigma_{ij}^0 \sigma_{ij}^0, \;\; o(y_j, \sigma_{ij}^0) = \sigma_{ij}^1 \sigma_{ij}^0$$

$$o(y_i, \sigma_{ij}^1) = \sigma_{ij}^1, \;\; o(y_j, \sigma_{ij}^1) = \sigma_{ij}^1$$

$$o(y_i, \sigma_{ij}^2) = \sigma_{ij}^3, \;\; o(y_j, \sigma_{ij}^2) = \sigma_{ij}^4$$

$$o(y_i, \sigma_{ij}^3) = \sigma_{ij}^3, \;\; o(y_j, \sigma_{ij}^3) = \sigma_{ij}^3$$

$$o(y_i, \sigma_{ij}^4) = \sigma_{ij}^4, \;\; o(y_j, \sigma_{ij}^4) = \sigma_{ij}^4$$

$$o(y_k, \sigma_{ij}^s) = \sigma_{ij}^s \text{ for all } k \notin \{i, j\} \text{ and } s \in \{0, ..., 4\}$$

Extend the output function to $\bigcup_{(i,j) \in A} (\Sigma_{ij})$ analogously. This ensures that y_i and y_j will generate a free semigroup for all $(i, j) \in A$, as y_i and y_j generate a free semigroup when acting on Σ_{ij}^*. Furthermore, if $k \neq i, j$ then y_k fixes any element of Σ_{ij}^*. To complete the description of the output function, let

$$o(y_i, \beta_j) = \begin{cases} \beta_j \beta_j & i = j \\ \beta_j & i \neq j \end{cases}$$

for all $\beta_j \in B$.

By construction of $\mathcal{A}$, x_i commutes with x_j in $S(X)$ if and only if y_i and y_j commute in $S(\mathcal{A})$, and x_i and x_j generate a free semigroup in $S(X)$ if and only if y_i and y_j generate a free semigroup in $S(\mathcal{A})$. Additionally, if $w_1, w_2 \in Q^*$ are equal in $S(\mathcal{A})$,

then (as in the proof with partially commutative monoids) $w_1(x_i, x_j) = w_2(x_i, x_j)$ for each $(i, j) \in A$ and, for each i, w_i must have as many occurrences of x_i as a subletter as w_2. Thus the logic of the proof of Theorem 3.4.8 gives the result. $\square$

3.5 Degree -1 Expanding Automata

In this section, we investigate the properties of monoids that can be realized as expanding automaton semigroups with degree -1 automata. The idea to look at these monoids came from the work of Said Sidki, who first applied the notion of the growth of an automaton to automaton groups (see [27]). This idea of looking at the growth of automata has been fruitful, as Sidki has shown (for example) that groups arising from automata of polynomial growth do not generate a free group (see [28]) and he has shown that groups arising from automata whose growth is at most linear have solvable power problem (see [27]). Let S be a semigroup. We say that S *has solvable power problem* if there is an algorithm which takes as input an element $s \in S$ and decides whether or not s is periodic.

Before we introduce definitions, we remark that for the rest of the section we will be discussing monoid actions on trees. Thus the trivial element of a monoid given by an expanding automaton will be assumed to be the function that pointwise fixes the tree.

Given an expanding endomorphism f of a tree Σ^*, define $\theta_k(f)$ to be the number of vertices on the k-th level of Σ^* such that the sections of f are non-trivial. If there exists an n such that $\theta_n(f) = 0$, then we say that f has *depth* n. If $\mathcal{A}$ is an expanding automaton such that every state of $\mathcal{A}$ has finite depth, then we say that $\mathcal{A}$ is an *expanding automaton of degree -1.*

Let M be a monoid such that $M = S(\mathcal{A})$ where $\mathcal{A}$ is an expanding automaton of

degree -1. Then we call M an expanding automaton monoid of degree -1. The class of expanding automaton monoids of degree -1 contains many interesting monoids. We show below that free partially commutative monoids arise from expanding automata of degree -1, for example. The class of synchronous automaton monoids of degree -1 is completely understood–it is a straightforward exercise to show that M is a synchronous automaton monoid of degree -1 if and only if M is finite. For the rest of this section, I will denote the function which pointwise fixes the tree.

Lemma 3.5.1. *Let $\mathcal{A}$ be the expanding automaton of degree -1 given by $a = (b, b, I, I)[10, 010, 3, 3, 4]$, $b = (I, I, I, I)[000, 0001, 4, 3, 4]$. Then $S(\mathcal{A})$ is the free monoid of rank 2.*

Proof. By construction of $\mathcal{A}$, note that 0 has an infinite forward orbit under the action of a.

Consider the word $b^{n_k}a^{m_k}...b^{n_1}a^{m_1}$ in $\{a, b\}^*$ where $m_i, n_j \in \mathbb{N}$ for all i, j. By construction of $\mathcal{A}$,

$$\begin{aligned}
b^{n_k}a^{m_k}...b^{n_1}a^{m_1}(0) &= b^{n_k}a^{m_k}...b^{n_1}(a^{m_1}(0)) \\
&= b^{n_k}a^{m_k}...a^{m_2}(0^{2n_1+1}a^{m_1}(0)) \\
&= b^{n_k}a^{m_k}...b^{m_2}(a^{m_2}(00)0^{2n_1-1}a^{m_1}(0) \\
&= ... \\
&= 0^{2n_k+1}a^{m_k}(00)...0^{2n_2-1}a^{m_2}(00)0^{2n_1-1}a^{m_1}.
\end{aligned}$$

Thus if $b^{n_k}a^{m_k}...b^{n_1}a^{m_1}$ and $b^{r_t}a^{s_t}...b^{r_1}a^{s_1}$ are words in $\{a, b\}^*$ with $n_k, r_t > 0$, then $b^{n_k}a^{m_k}...b^{n_1}a^{m_1} = b^{r_t}a^{s_t}...b^{r_1}a^{s_1}$ in $S(\mathcal{A})$ if and only if $m_i = s_i$ and $n_j = s_j$ for all i, j. The same computation as above will show that any words $w_1a, w_2a \in \{a, b\}^*$ are equal in $S(\mathcal{A})$ if and only if w_1a and w_2a are equal letter by letter. The same

computation will also show that w_1b and w_2b map 0 to the same place if and only if w_1b and w_2b are equal letter by letter, and so $w_1b = w_2b$ in $S(\mathcal{A})$ if and only if $w_1b = w_2b$ in the free monoid $\{a, b\}^*$.

Lastly, note that for any $w_1, w_2 \in \{a, b\}^*$, $w_1a(2)$ ends in a 3 while $w_2b(2)$ ends in a 4. Thus $w_1a \neq w_2b$ in $S(\mathcal{A})$ for any $w_1, w_2 \in \{a, b\}^*$. So $S(\mathcal{A})$ is the free monoid of rank 2. □

Proposition 3.5.2. *Every free partially commutative monoid is an expanding automaton monoid of degree -1.*

Proof. The constructions follow the same logic as the proof of Theorem 3.4.8. Let $M = \langle x_1, ..., x_n \mid R\rangle$ be a free partially commutative monoid. Begin constructing an automaton $\mathcal{A}$ with an alphabet $\{a_1, ..., a_n\}$ and state set $\{y_1, ..., y_n\}$ by defining $t(y_i, a_j) = I$ for all i, j and defining $o(y_i, a_j) = a_ja_j$ if $i = j$, $o(y_i, a_j) = a_j$ if $i \neq j$. This ensures that each generator of $S(\mathcal{A})$ is not periodic. For each i, j with $i < j$ such that x_i and x_j do not commute, glue in the automaton from Lemma 3.5.1 onto the states y_i and y_j over a new alphabet $\{b_{ij1}, b_{ij2}, ..., b_{ij5}\}$. For any other $y_k \neq y_i, y_j$, let $t(y_k, b_{ijm}) = I$ and let $o(y_k, b_{ijm}) = b_{ijm}$ for for $1 \leq m \leq 5$.

Note that the construction of $\mathcal{A}$ implies that $\mathcal{A}$ is an expanding automaton of degree -1. Furthermore, if x_i and x_j commute (respectively do not commute) in M then y_i and y_j commute (respectively do not commute) in M. Thus the logic of the proof of Theorem 3.4.8 shows that $S(\mathcal{A}) \cong M$. □

We now show that if $M = S(\mathcal{A})$ where $\mathcal{A}$ is an expanding automaton of degree -1, then M has solvable power problem. First, note that if f is an expanding endomorphism of depth m and g is an endomorphism of depth n, it is straightforward to show that the depth of fg is at most the maximum of m and n. Thus the algorithm we give takes as input a state of an expanding automaton of degree -1. We can do

this because if $\mathcal{A} = (Q, \Sigma, t, o)$ is a degree -1 expanding automaton, then any element $q \in Q^*$ is also a state of an expanding automaton of degree -1 (one can build this automaton using Equation 2.2). We need the following lemma.

Lemma 3.5.3. *Let $\mathcal{A} = (Q, \Sigma, t, o)$ be an expanding automaton of degree -1. Let $q \in Q$ be an element of depth n. Then q is non-periodic in $S(\mathcal{A})$ if and only if there exists a word $w \in \Sigma^*$ with $|w| \leq n$ such that w has infinite forward orbit under the action of a.*

Proof. Let $\mathcal{A} = (Q, \Sigma, t, o)$ be an expanding automaton of degree -1 with $q \in Q$ an element of depth n. Note that the backwards direction is clear. So assume that for all $w \in \Sigma^*$ with $|w| \leq n$, the forward orbit of w is finite. Let $r, s \in \mathbb{N}$ be such that $a^r(w) = a^s(w)$ for all $w \in \Sigma^*$ with $|w| \leq n$. Fix $w \in \Sigma^*$ with $|w| \leq n$. Since a has depth n, for any $v \in \Sigma^*$ we have $a^r(wv) = a^s(wv)$. Thus $a^r = a^s$. □

Proposition 3.5.4. *Let M be an expanding automaton monoid of degree -1. Then M has solvable power problem.*

Proof. Let M be an expanding automaton monoid of degree -1 corresponding to an automaton $\mathcal{A} = (Q, \Sigma, t, o)$. Let $q \in Q$ be of depth n. By Lemma 3.5.3, we need to show that one can decide whether or not there exists a $w \in \Sigma^*$ with $|w| \leq n$ such that the forward orbit of w under the action q is infinite.

Fix $w \in \Sigma^*$ with $|w| \leq n$. Let $r \in \mathbb{N}$ be the minimal number such that $|q^r(w)| \geq n$. If $r = 0$, then the forward orbit of w is finite. Let $w' = q^r(w)$ and let s be the number of words in Σ^* of length n. Suppose that $q^{k_1}(w') \neq q^{k_2}(w')$ for all $1 \leq k_1, k_2 \leq s$ and $k_1 \neq k_2$. Then the forward orbit of w' under the action of q is infinite, as the word length of w' under the action of q must become arbitrarily large. □

Chapter 4

A Class of Metabelian Automaton Groups

Let G be a group and for $g_1, g_2 \in G$ let $[g_1, g_2]$ denote the element $g_1 g_2 g_1^{-1} g_2^{-1}$. Let $G^{(1)} = [G, G]$, i.e. $G^{(1)}$ is the subgroup of G generated by elements of the form $\{[g, h] \mid g, h \in G\}$. For $n > 1$ inductively define $G^{(n)}$ by $G^{(n)} = [G^{(n-1)}, G^{(n-1)}]$. The group G is *solvable of derived length* d if $G^{(d)}$ is trivial and $G^{(d-1)}$ is non-trivial. The group G is *metabelian* if G is solvable of derived length 2.

In this chapter we classify the metabelian groups that arise from a restricted class of invertible synchronous automata. For the rest of this section, let σ denote the permutation of $\{0, 1\}$ that sends 0 to 1 and 1 to 0 and let I denote the automorphism that pointwise fixes the tree $\mathcal{T}(\{0, 1\}^*)$.

We call an invertible synchronous automaton $\mathcal{A}$ a *simply-sectioned automaton* if $\mathcal{A}$ arises from a wreath decomposition of the form $a = \sigma_a(a_0, a_1)$, $b = \sigma_b(b_0, b_1)$ where $\sigma_a, \sigma_b \in \{(), \sigma\}$ where $()$ denotes the trivial permutation $[0, 1]$ and $a_0, a_1, b_0, b_1 \in \{a^{\pm 1}, b^{\pm 1}, I\}$. In other words, $\mathcal{A}$ is a simply-sectioned automaton if $G(\mathcal{A})$ is generated by (at most) two elements whose wreath decompositions are described as above. If

$G = G(\mathcal{A})$ where $\mathcal{A}$ is a simply-sectioned automaton, then call G a *simply-sectioned group*. The goal of this chapter is to prove the following theorem ($\mathbb{Z}_2$ is the cyclic group of order 2).

Theorem 4.0.5. *Let G be a metabelian simply-sectioned group. Then G is one of the following: the trivial group, $\mathbb{Z}_2$, $\mathbb{Z}_2 \times \mathbb{Z}_2$, the dihedral group of order 8, $\mathbb{Z}$, the infinite dihedral group, $\mathbb{Z} \times \mathbb{Z}$, the lamplighter group, the klein bottle group, the group with presentation $\langle c, d \mid c^2 = 1, cd^2 = d^2c \rangle$, or the group with presentation $\langle c, d \mid c^2 = d^4 = (cd)^4 = 1 \rangle$.*

In [16], Grigorchuk and Zuk show that the group corresponding to the simply-sectioned wreath decomposition $a = \sigma(a, b)$ and $b = (a, b)$ is the lamplighter group. This group is metabelian, as it is the semidirect product of two abelian groups. Thus this work seeks to find what other "lamplighter-like" groups we can find when looking at other simply-sectioned automata.

We prove Theorem 4.0.5 as follows. First, we show that each group mentioned in the statement of the theorem arises as a simply-sectioned group. Each group arises from multiple simply-sectioned automata; however, the following three operations on automata do not change the isomorphism class of the corresponding group:

1. passing to inverses of all generators,
2. permuting the states of the automaton,
3. permuting the alphabet letters.

We then note that the above operations give all other realizations of the group in the class of simply-sectioned automata, i.e. given a simply-sectioned automaton one can quickly transform that automaton into an automaton that is considered in this

chapter via those three operations. At the end of the chapter, we show that no other metabelian groups arise in this class. We do this by choosing an automaton representing the isomorphism class of each group and demonstrate a non-trivial commutator. The results are displayed in Table 4.1. The non-trivial commutators were found using the AutomGrp package for GAP developed by Muntyan and Savchuk ([21]).

Recall that in Section 2.2 we give an algorithm for solving the word problem in the class of automaton groups. This algorithm can be used to verify any of the calculations performed below. Additionally, recall from Section 2.2 that if $\mathcal{A}$ is an invertible synchronous automaton, the symbol $\mathcal{A}'$ denotes the dual automaton for $\mathcal{A}$. Because we compose functions right-to-left, we feed words into the dual automaton from right to left and the dual automaton outputs words from right to left.

We will assume that any wreath recursion that appears in the remainder of Chapter 4 defines a simply-sectioned group.

Suppose first that $a = (a_0, a_1)$ and $b = (b_0, b_1)$, i.e. $\sigma_a = \sigma_b = ()$. Then neither a nor b moves an element of $\{0,1\}^*$, and hence $\langle a, b\rangle$ is trivial.

Suppose next that $a = \sigma(a_0, a_1)$ and $b = \sigma(b_0, b_1)$ (i.e. $\sigma_a = \sigma_b = \sigma$) and $a_0, a_1, b_0, b_1 \in \{a^{\pm 1}, b^{\pm 1}\}$. Then, in the automaton corresponding to the given wreath recursion, every arrow is labeled by $0|1$ or $1|0$. For any word $w \in \{0,1\}^*$, let w_i denote the i-th letter of w. Then, for any $w \in \{0,1\}^+$, $a(w) = b(w) = \overline{w}$ where $\overline{w}_i = (w_i - 1) \bmod 2$. Thus $\langle a, b\rangle \cong \mathbb{Z}_2$.

Suppose now that $a = \sigma(b, b^{-1})$ and $b = (a, I)$. Then $a^2 = (I, I) = I$, $b^2 = (a^2, I) = (I, I)$, and $(ab)^4 = (I, I)$. Thus $a^2 = b^2 = (ab)^4 = 1$ in $\langle a, b\rangle$. Furthermore, one can check (using the algorithm given in Section 2.2) that each prefix of the word $(ab)^4$ is non-trivial in $\langle a, b\rangle$. Thus $\langle a, b\rangle$ is the dihedral group of order 8.

Suppose that $a = \sigma(b, I)$ and $b = (I, I)$. Then one can check that $b^2 = a^4 = baba = 1$ in $G := \langle a, b\rangle$. Furthermore, one can check (using the algorithm given in

Section 2.2) that a^2, a^3, ba, ab, and a^2b are all distinct elements of G. Thus $\langle a, b\rangle$ is a group of order 8 that is a quotient of the dihedral group of order 8, and so $\langle a, b\rangle$ is the dihedral group of order 8.

Suppose that $a = \sigma(a, a)$ and $b = \sigma(I, I)$. Then one can check that $a^2 = b^2 = abab = 1$ in $G := \langle a, b\rangle$. Furthermore, one can check a, b, and ab are distinct elements of G. Thus $\langle a, b\rangle \cong \mathbb{Z} \times \mathbb{Z}$.

Suppose that $a = \sigma(a, a)$ and $b = \sigma(I, I)$. Then one can check that $b^2 = a^4 = 1$ and $bab = a^3$ in $G := \langle a, b\rangle$. Furthermore, one can check that the order of G is 8. Thus G is the dihedral group of order 8.

In [13], Grigorchuk, Nekrashevych, and Suschansky show that the group corresponding to the wreath decomposition $a = \sigma(a, b)$ and $b = (a, b)$ is the lamplighter group, the group corresponding to the wreath decomposition $a = (a, a)$ and $b = \sigma(a, a)$ is $\mathbb{Z}_2 \times \mathbb{Z}_2$, the group corresponding to the wreath decomposition $a = \sigma(a, a)$ and $b = (b, a)$ is the infinite dihedral group, and the group corresponding to the wreath decomposition $a = \sigma(a, I), b = \sigma(a, I)$ is $\mathbb{Z}$. In [3], Bondarenko et al. show that the group corresponding to the wreath decomposition $a = \sigma(b, I)$ and $b = (a, a)$ is $\mathbb{Z}^2$.

Proposition 4.0.6. *The group corresponding to the wreath recursion $a = \sigma(a, b^{-1})$ and $b = (b, a^{-1})$ is the lamplighter group.*

Proof. Let G be the group corresponding to the group with wreath recursion $a = \sigma(a, b^{-1})$ and $b = (b, a^{-1})$. Then $G = \langle a, b^{-1}\rangle$ and $b^{-1} = (b^{-1}, a)$. Thus the automaton corresponding to the wreath decomposition $a = \sigma(a, b^{-1})$ and $b^{-1} = (b^{-1}, a)$ is the same 2-state automaton that Grigorchuk and Zuk show gives the lamplighter group (see [16]). $\square$

In order to show that the rest of the groups that appear in Theorem 4.0.5 arise as

automaton groups in the class of simply-sectioned groups, we need a technical lemma.

Lemma 4.0.7. *Let G be an automaton group associated with the invertible automaton $\mathcal{A} = (Q, \{0,1\}, t, o)$ such that $\{g_x \mid g \in Q$ and $x \in \{0,1\}\}$ generates a solvable group of derived length d. Then G is solvable of derived length d or $d+1$.*

Proof. Let $G := G(\mathcal{A})$ for an invertible automaton $\mathcal{A} = (Q, \{0,1\}, t, o)$, and suppose that $\{g_x \mid g \in Q,\ x \in \{0,1\}\}$ generates a solvable group of derived length d. We induct on d to show that if $g \in G^{(d+1)}$ then $g_0, g_1 \in G^{(d)}$.

First, let $w \in (Q \cup Q^{-1})^*$ be a word such that $w \in [G, G]$ when considered as an element of G. Then w has even word length in $(Q \cup Q^{-1})^*$, and hence w labels a circuit when considered as a path in $\mathcal{A}'$ starting at 0 or at 1. So any element of $[G, G]$ fixes 0 and 1.

For the base case, assume that the group generated by $\{g_x \mid g \in Q,\ x \in \{0,1\}\}$ is abelian and let $g \in G^{(2)}$. Write $g = [[w_1, w_2], [w_3, w_4]]$ for some $w_1, .., w_4 \in G$. Then for any $h_1, h_2 \in G$ the word $[h_1, h_2]$ labels a circuit in $\mathcal{A}'$ when read starting from either 0 or 1. Thus

$$g_x = [w_1, w_2]_x [w_3, w_4]_x [w_1, w_2]_x^{-1} [w_3, w_4]_x^{-1} \text{ for } x \in \{0,1\}.$$

So $g_0, g_1 \in G^{(1)}$. By assumption, g_0 and g_1 are trivial. Since g fixes the first level of the tree, g is trivial in $G(\mathcal{A})$. Hence if the group generated by $\{g_x \mid g \in Q,\ x \in \{0,1\}\}$ is abelian, then G is abelian or metabelian.

Now if $g \in G^{(n)}$, noting that g labels a circuit from any vertex in the dual and performing the same calculation as above gives that $g_0, g_1 \in G^{(n-1)}$, and induction gives the result. $\square$

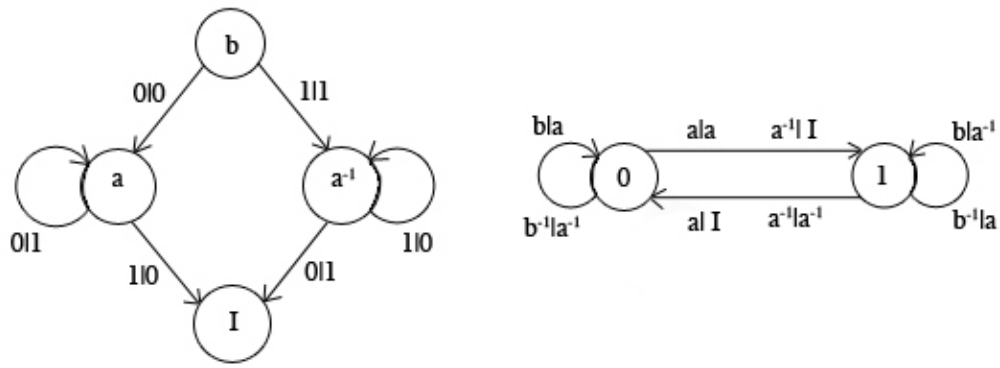

Figure 4.1: The automaton from Proposition 4.0.8 (left) and its dual automaton (right).

Proposition 4.0.8. *Let G be the group corresponding to the automaton given by the wreath recursion $a = \sigma(a, I)$ and $b = (a, a^{-1})$. Then G is metabelian, and moreover is isomorphic to the Klein bottle group.*

Proof. Since $b_x, a_x \in \langle a \rangle$ for any $x \in \{0, 1\}$, Lemma 4.0.7 implies that G is metabelian. The the Klein bottle group is the group $K = \langle c, d \mid cdc^{-1} = d^{-1} \rangle$. A set of normal forms for K is $\{c^i d^j \mid i, j \in \mathbb{Z}\}$. Using the algorithm from Section 2.2, one can check that $aba^{-1} = b^{-1}$ in G. Thus, to show that $G \cong K$ we show that $a^i b^j$ is non-trivial for each $(i, j) \in \mathbb{Z} \times \mathbb{Z} - (0, 0)$. Note that a has infinite order because the subautomaton containing a and I is the *binary adding machine* (see the proof of Theorem 3.4.8). Thus a has infinite order. Note that b has infinite order because b stabilizes 0 and $b_0 = a$.

Suppose that $i, j \neq 0$ and i is even. Then, using the dual automaton (see Figure 4.1), we see that

$$(a^i b^j)_0 = a^{\frac{i}{2}} a^j \text{ and } (a^i b^j)_1 = a^{\frac{i}{2}} a^{-j},$$

(recall that one must feed the above words into the dual automaton from right to left) and so one of $(a^ib^j)_0$ or $(a^ib^j)_1$ is non-trivial. If i is odd and positive, then $(a^ib^j)_0 = a^{\lceil \frac{i}{2} \rceil}a^j$ and $(a^ib^j)_1 = a^{\lfloor \frac{i}{2} \rfloor}a^{-j}$. So, if $a^ib^j = 1$, then $\lfloor \frac{i}{2} \rfloor = -\lceil \frac{i}{2} \rceil$, which happens if and only if $i = 0$. Thus in this case as well a^ib^j is non-trivial. The other cases follow similarly to show that all words of the form a^ib^j with one of i and j non-zero are non-trivial in G. Hence G is the Klein bottle group. $\square$

Much of the work in the remainder of this chapter uses rewriting systems to find normal forms for elements of the groups. For basic information on the theory of rewriting systems and, specifically, for information about the Knuth-Bendix Algorithm (an algorithm which is used to ensure that a given set of rewriting rules gives a complete rewriting system), see Chapter 2 of the book by Sims ([30]).

Proposition 4.0.9. *Let G be the automaton group with wreath recursion $a = \sigma(a, I)$ and $b = \sigma(a, a^{-1})$. Then G is metabelian and has presentation $\langle a, b \mid b^2 = 1, ba^2 = a^2b \rangle$. Moreover, $G \cong D_\infty \rtimes \mathbb{Z}$.*

Proof. Note that the group generated by $\{g_x \mid g \in Q, x \in \{0, 1\}\}$ is cyclic, and hence Lemma 4.0.7 implies that G is metabelian. Also, one can verify directly that $b^2 = 1$ and $ba^2 = a^2b$ in G using the word problem algorithm from Section 2.2. Let $H = \langle c, d \mid d^2 = 1, dc^2 = c^2d$. Then H is isomorphic to the semidirect product $D_\infty \rtimes \mathbb{Z} = \langle p, q \mid p^2 = q^2 = 1 \rangle \rtimes \langle t \mid \rangle$ with action $tpt^{-1} = q, tqt^{-1} = p$. This isomorphism can be shown with the function that sends t to a, q to b, and q to aba^{-1}.

By computing resolutions of critical pairs via the Knuth-Bendix algorithm, one can check that the rewriting rules

$$cc^{-1} \to 1, c^{-1}c \to 1, d^2 \to 1, c^2d \to dc^2, c^{-1}d \to cdc^{-2}$$

give a complete rewriting system for H over the alphabet $\{c, c^{-1}, d\}$. Thus a set of normal forms for H is

$$NF := \{(cd)^{m_1}c^{n_1}, (dc)^{m_2}dc^{n_2} \mid m_i \in \mathbb{N} \cup \{0\}, n_i \in \mathbb{Z}\}.$$

Let $\phi : \{c, d\}^* \to G$ be defined by $\phi(c) = a$ and $\phi(d) = b$. We show that any word in $\phi|_{NF}$ is injective. To do this, we show that each element of $\phi(NF)$ is non-trivial in G. This is enough to check, for suppose that $\phi(v) = \phi(w)$ for some $v, w \in NF$. Then $\phi(vw^{-1}) = 1$ in G. If the normal form of vw^{-1} is non-trivial in H, then we have a non-trivial element of NF mapping to 1 under ϕ. If the normal form of vw^{-1} is trivial in H, then $v = w$ in H, and so $vw^{-1} = 1$ in H.

First, note that a has infinite order in G because the subautomaton containing a and I is the adding machine automaton. Let $n \in \mathbb{Z}$ be odd. Then for any $m \in \mathbb{N}$ we have that $(ab)^m a^n$ is non-trivial in G because such an element permutes the first level of the tree. Also, if $s \in 2\mathbb{Z}$ then for any $m \in \mathbb{N}$ we have that $(ba)^m ba^s$ is non-trivial in G because such an element permutes the first level of the tree.

Let $m \in \mathbb{N}$ and $n \in 2\mathbb{Z}$. Then the dual automaton implies that

$$((ab)^m a^n)_0 = a^{m+\frac{n}{2}} \quad \text{and} \quad ((ab)^m a^n)_1 = a^{\frac{n}{2}}.$$

Since one of the above sections must be non-trivial in G, any word of the form $(ab)^m a^n$ with $m \in \mathbb{N}$ and $n \in \mathbb{Z}$ is non-trivial in G.

Now let $m \in \mathbb{N}$ and $n \in \mathbb{Z}$ such that n is odd and negative. Then $((ba)^m ba^n)_0 = a^{-1}a^{\lceil n/2 \rceil}$. Since n is negative, this section is non-trivial in G and hence $(ba)^m ba^n$ is non-trivial in G.

Let $m \in \mathbb{N}$ and $n \in \mathbb{Z}$ such that n is odd and positive. Then $((ba)^m ba^n)_1 =$

$a^m a a^{\lfloor n/2 \rfloor}$. Since n is positive, this section is non-trivial in G and hence $(ba)^m ba^n$ is non-trivial in G.

We have now shown that each element of $\phi(NF)$ is non-trivial in G. Thus $\phi|_{NF}$ is injective, and $G \cong \langle a, b \mid b^2 = 1, ba^2 = a^2 b \rangle$. $\square$

Proposition 4.0.10. *The group G with wreath recursion $a = \sigma(b, b),\ b = \sigma(b, 1)$ has presentation $\langle a, b \mid b^2 a = ab^2, a^2 = b^4 \rangle$. This group is isomorphic to the group presented by $\langle r, s \mid r^2 = 1, s^2 r = r s^2 \rangle$.*

Proof. Note that G is metabelian by Lemma 4.0.7. Let $H = \langle c, d \mid d^2 c = c d^2, c^2 = d^4 \rangle$. One can check that, in G, $b^2 a = ab^2$ and $a^2 = b^4$. Thus G is a quotient of H. One can also check that the rewriting rules

$$cc^{-1} \to 1, \quad c^{-1}c \to 1, \quad dd^{-1} \to 1, \quad d^{-1}d \to 1, \quad d^3 \to c^2 d^{-1}, \ d^{-3} \to c^{-2} d$$

$$d^2 c \to c d^2, \ d^2 c^{-1} \to c^{-1} d^2, \quad d^{-2} c^{-1} \to c^{-1} d^{-2}, \quad d^{-2} c \to c d^{-2}$$

$$dc^{-2} \to c^{-2} d, \quad d^{-1} c^2 \to c^2 d^{-1}, \quad d^{-1} c^{-2} \to c^{-2} d, \ cd^{-2} \to c^{-1} d^2$$

give a complete rewriting system for H. Let $S \subseteq \{c, c^{-1}, d, d^{-1}\}^*$ denote the set of words that do not contain cd^{-2} as a subword. Then a set of normal forms NF for H is

$$\{c^m d^{\delta_1} c^{\epsilon_1} ... d^{\delta_r} c^{\epsilon_r} d^n \mid \delta_i, \epsilon_j \in \{-1, 1\}, \ m \in \mathbb{Z}, \ n \in \{-2, -1, 0, 1, 2\}, \ r \geq 0\} \cap S.$$

Let $\phi : \{c, d\}^* \to G$ be a monoid homomorphism defined by $\phi(c) = a$ and $\phi(d) = b$. We show that each element of $\phi(NF)$ is non-trivial in G.

Let $a^m b^{\delta_1} a^{\epsilon_1} ... b^{\delta_r} a^{\epsilon_r} b^n \in \phi(NF)$ for some $m, n, r, \delta_i, \epsilon_j$. Define $\overline{\delta_i} = 1$ if $\delta_i = 1$ and

$\overline{\delta_i} = 0$ if $\delta_i = -1$. Similarly, define $\delta_i' = 0$ if $\delta_i = 1$ and $\delta_i' = -1$ if $\delta_i = -1$. Then

$$(a^m b^{\delta_1} a^{\epsilon_1} ... b^{\delta_r} a^{\epsilon_r} b^n)_0 = \begin{cases} b^m b^{\delta_1'} b^{\epsilon_1} ... b^{\delta_r'} b^{\epsilon_r} b^{n/2} & n \text{ even} \\ b^m b^{\overline{\delta_1}} b^{\epsilon_1} ... b^{\overline{\delta_n}} b^{\epsilon_n} b^{\lceil n/2 \rceil} & n \text{ odd} \end{cases}$$

$$(a^m b^{\delta_1} a^{\epsilon_1} ... b^{\delta_r} a^{\epsilon_r} b^n)_1 = \begin{cases} b^m b^{\overline{\delta_1}} b^{\epsilon_1} ... b^{\overline{\delta_r}} b^{\epsilon_r} b^{n/2} & n \text{ even} \\ b^m b^{\delta_1'} b^{\epsilon_1} ... b^{\delta_n'} b^{\epsilon_n} b^{\lfloor n/2 \rfloor} & n \text{ odd} \end{cases}$$

Thus either $(a^m b^{\delta_1} a^{\epsilon_1} ... b^{\delta_r} a^{\epsilon_r} b^n)_0$ or $(a^m b^{\delta_1} a^{\epsilon_1} ... b^{\delta_r} a^{\epsilon_r} b^n)_1$ is non-trivial in G, and so any element of $\phi(NF)$ is non-trivial in G. Therefore G has the desired presentation.

Let $K = \langle r, s \mid r^2 = 1, s^2 r = r s^2 \rangle$, and let $g = a^{-1} b^2$. Then $G = \langle b, g \rangle$, and one can check that $G \cong H$ via $r \to b, s \to a^{-1} b$. □

Proposition 4.0.11. *The group G with wreath recursion $a = \sigma(a, I)$ and $b = \sigma(I, I)$ has presentation $\langle a, b \mid b^2 = 1,\ a^2 b = b a^2 \rangle$.*

Proof. The proof goes exactly as the two previous proofs, so we omit the computations. □

We now turn to showing that the group $G = \langle c, d \mid c^2 = d^4 = (cd)^4 = 1 \rangle$ is simply-sectioned. This group is called the $(2, 4, 4)$ *von Dyck group*, and it is well known that $[G, G] \cong \mathbb{Z}^2$ (see the last chapter of [6]), so G is metabelian. We need the following lemma to obtain a set of normal forms for G.

Proposition 4.0.12. *Let G be the automaton group with wreath recursion $a = \sigma(b, b^{-1})$, $b = \sigma(a, I)$. Then G has presentation $\langle a, b \mid a^2 = b^4 = (ab)^4 = 1 \rangle$, i.e. G is the $(2, 4, 4)$ von Dyck group.*

Proof. To prove this proposition, we proceed as in the previous proofs in this chapter: we choose a set of normal forms NF for $H := \langle c, d \mid c^2 = d^4 = (cd)^4 = 1 \rangle$ and show

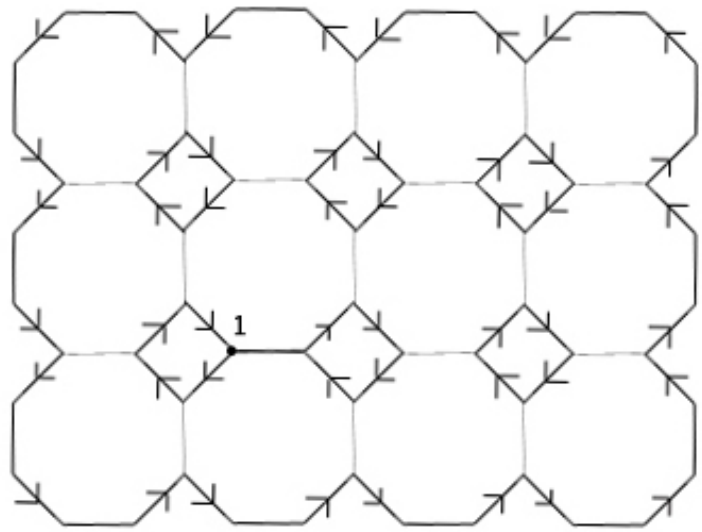

Figure 4.2: A finite portion of the Cayley graph of $\langle c, d \mid c^2 = d^4 = (cd)^4 = 1\rangle$. The oriented edges are "d"-edges, and the unoriented edges are "c"-edges.

that the corresponding map from NF to G is injective. One can check using the algorithm from Section 2.2 that $a^2 = b^4 = (ab)^4 = 1$ in G, and so G is a quotient of H.

Let $H = \langle c, d \mid c^2 = d^4 = (cd)^4 = 1\rangle$. Then one can check that the following rules give a complete rewriting system for H over $\{c, d\}^*$:

$$c^2 \to 1,\ d^4 \to 1,\ dcdcd \to cd^3c$$

$$d^3(cd^2)^n cd^3 \to cd(cd^2)^n cdc \ \text{ for all } n \geq 0.$$

Consider the graph Γ in Figure 4.2. Since the above rewriting rules give a complete rewriting system for H, this graph is the Cayley graph for H over the given presentation. For computational purposes, we do not use the normal forms for H given by the above rewriting system. For each vertex v in the graph, we choose a unique path from 1 to v as follows. Call words of the form $(cd^2)^m$ and $(d^2c)^n$ for

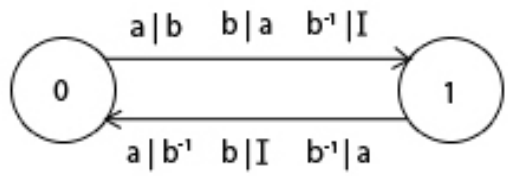

Figure 4.3: The dual automaton of the automaton from Proposition 4.0.12

some $m, n \in \mathbb{N}$ and prefixes of such words the *main horizontal of* Γ. Choose a path p from 1 to v such that p travels along the main horizontal until p is directly "above" or "below" v, and then p travels vertically until p reaches v. Also, choose p such that p never traverses a d edge in reverse. Such paths represent our set of normal forms for H over $\{c, d\}^*$. Call this set of normal forms NF', and let $w \in NF'$. The word d^3 occurs as a subword of w either at the beginning or the end of w, or d^3 is a "turning" word that allows w to turn "down" off the main horizontal. The word cd serves a similar function, allowing a word to turn "up" off the main horizontal.

Let $\phi : \{c, d\}^* \to \{a, b\}^*$ be a monoid homomorphism defined by $\phi(c) = a$ and $\phi(d) = b$. We will consider all words in $\phi(NF')$, and show that they are non-trivial in G. We will break into cases, the cases being determined by the form of the word in $\phi(NF')$. Before we break into cases, we need to do some basic computations with the dual automaton.

Let $\mathcal{A}$ be the underlying automaton for G. Then $\mathcal{A}' = (\{0, 1\}, \{a, b\}, t', o')$ is defined as follows (see Figure 4.3):

$$t'(0, a) = t'(0, b) = 1,\ t'(1, a) = t'(1, b) = 0,$$

$$o'(0, a) = b,\ o'(0, b) = a,\ o'(1, a) = b^{-1} = b^3,\ o'(1, b) = I.$$

Since $(ab^2)^2$ stabilizes 11 and $((ab^2)^2)_{11} = ab^2$, ab^2 has infinite order in G. Simi-

larly, $(bab)^2$ stabilizes 00 and $((bab)^2)_{00} = bab$, and so bab has infinite order in G.

Let $m \in \mathbb{N}$. Then

$$((ab^2)^m)_0 = \begin{cases} (b^3aba)^{m/2} & m \text{ even} \\ ba(b^3aba)^{\lfloor m/2 \rfloor} & m \text{ odd} \end{cases}$$

$$((ab^2)^m)_1 = \begin{cases} (bab^3a)^{m/2} & m \text{ even} \\ b^3a(bab^3a)^{\lfloor m/2 \rfloor} & m \text{ odd} \end{cases}$$

$$((bab^3a)^m)_0 = (bab)^n, \quad ((bab^3a)^m)_1 = (ab^2)^n$$

$$((b^3aba)^m)_0 = (ab^2)^m, \quad ((b^3aba)^m)_1 = (b^3ab^3)^m.$$

With these equations we are now prepared to show that each element of $\phi(NF')$ is non-trivial in G. Note that any word in $\{a, b\}^*$ of odd word length (as measured in $\{a, b\}^*$) must be non-trivial in G because such a word will transpose 0 and 1, and so we omit such words from our cases. In the following computations, we use the fact that words of odd length move the first level of the tree to show that elements of G are non-trivial. Also, it is straightforward to show that any word in $\phi(NF')$ of length four or less (as measured in $\{a, b\}^*$) is non-trivial in G.

Case 1: Words beginning with *aba*. Let $w \in \phi(NF')$ be of the form $ab(ab^2)^m$ for some $m \in 2\mathbb{N}$. Then $w_1 = b(bab^3a)^{m/2}$, which is non-trivial in G. So w is non-trivial in G.

Let $w \in \phi(NF')$ be of the form $ab(ab^2)^m a$ where m is odd. Then $w_0 = b^3ab^3a(bab^3a)^{\lfloor m/2 \rfloor}b$, which is non-trivial in G. So w is non-trivial in G.

Let $w \in \phi(NF')$ be of the form $ab(ab^2)^m ab$ with $m \in 2\mathbb{N}$. Then $w_1 = b(bab^3a)^{m/2}$, and so $w_{11} = (bab)^{m/2}$. Since bab has infinite order in G, w_{11} is non-trivial in G and hence w is non-trivial in G.

Finally, let $w \in \phi(NF')$ be of the form $ab(ab^2)^m b$ where m is odd. Then $w_1 = b^2a(b^3aba)^{\lfloor m/2 \rfloor}$, which is non-trivial in G. So w is non-trivial in G.

Case 2: Words beginning with ab^2. Let $w \in \phi(NF')$ be of the form $(ab^2)^m a$ where m is odd. Then $w_1 = ba(b^3aba)^{\lfloor m/2 \rfloor}b^3$, which is non-trivial in G. So w is non-trivial in G.

Let $w \in \phi(NF')$ be of the form $(ab^2)^m b$ where m is odd. Then $w_0 = ba(b^3aba)^{\lfloor m/2 \rfloor}a$, which is non-trivial in G. So w is non-trivial in G.

Let $w \in \phi(NF')$ be of the form $(ab^2)^m ab$ where m is even. Then $w_1 = (bab^3a)^{m/2}b$, which is non-trivial in G. So w is non-trivial in G.

Let $w \in \phi(NF')$ be of the form $(ab^2)^m aba$ where m is odd. Then $w_1 = ba(b^3aba)^{\lfloor m/2 \rfloor}b^3ab^3$, which is non-trivial in G. So w is non-trivial in G.

Let $w \in \phi(NF')$ be of the form $(ab^2)^m abab$ where m is even. Then $w_{11} = (ab^2)^m a$, and so by the first paragraph of Case 2 w_{11} is non-trivial in G. So w is non-trivial in G.

Let $w \in \phi(NF')$ be a word of the form $(ab^2)^m b(ab^2)^n$. If m is odd and n is even, then $w_0 = (bab^3a)^{m/2}a(b^3aba)^{n/2}$. If m is even and n is odd, then $w_1 = (b^3aba)^{m/2}a(bab^3a)^{n/2}$. In both cases, w has a non-trivial section and so w is non-trivial in G.

Subcase 2a: Words of the form $(ab^2)^m b(ab^2)^n b$. Let $w \in \phi(NF')$ be a word of the form $(ab^2)^m b(ab^2)^n b$. If m and n are even, then $w_1 = (bab^3a)^{m/2}a(b^3aba)^{n/2}$, which is non-trivial in G. So w is non-trivial in this case.

Suppose now that m and n are both odd. Then

$$w_1 = ba(b^3aba)^{\lfloor m/2 \rfloor}ba(b^3aba)^{\lfloor n/2 \rfloor}$$

and so

$$w_{10} = b(ab^2)^{\lfloor m/2 \rfloor} b(ab^2)^{\lfloor n/2 \rfloor}.$$

If $\lfloor m/2 \rfloor$ and $\lfloor n/2 \rfloor$ are both even, then w_{10} is non-trivial because $(b(ab^2)^{2s}b(ab^2)^{2t})_1 = a(b^3aba)^s(bab^3b)^t$ for any $s, t \in \mathbb{N}$. If one of $\lfloor m/2 \rfloor$ and $\lfloor n/2 \rfloor$ is even and the other is odd, then w_{10} has odd word length in $\{a, b\}^*$ and hence is non-trivial in G. So suppose that both $\lfloor m/2 \rfloor$ and $\lfloor n/2 \rfloor$ are odd. Then

$$w_{100} = ba(b^3aba)^{\lfloor \lfloor m/2 \rfloor /2 \rfloor} ba(b^3aba)^{\lfloor \lfloor n/2 \rfloor /2 \rfloor},$$

and we can continue taking sections at 0 until we obtain a word of the form $b(ab^2)^x b(ab^2)^y$ where one of x or y is even. Thus w is non-trivial in G, and Subcase 2a is finished.

Let $w \in \phi(NF')$ be a word of the form $(ab^2)^m b(ab^2)^n a$. If m and n are both even, then $w_0 = (b^3aba)^{m/2}(bab^3a)^{n/2}a$, which is non-trivial in G. If m and n are both odd, then $w_1 = ba(b^3aba)^{\lfloor m/2 \rfloor} ba(b^3aba)^{\lfloor n/2 \rfloor} b^3$, which is non-trivial in G. Thus w is non-trivial in G.

Subcase 2b: Words of the form $(ab^2)^m b(ab^2)^n ab$. Let $w \in \phi(NF')$ be of the form $(ab^2)^m b(ab^2)^n ab$. If m is odd and n is even, then $w_1 = ba(b^3aba)^{\lfloor m/2 \rfloor}(bab^3a)^{n/2}b$, which is non-trivial in G. So w is non-trivial in G in this case. Thus, if m is odd, any word of the form $(ab^2)^m b(ab^2)^n ab$ is on-trivial in G (if n is odd then such an element will transpose 0 and 1).

Suppose now that m is even and n is odd. Then $w_0 = (b^3aba)^{m/2}ba(b^3aba)^{\lfloor n/2 \rfloor}b^3a$, and so $w_{00} = (ab^2)^{m/2}b(ab^2)^{\lfloor n/2 \rfloor}ab$. Thus there is an $r \in \mathbb{N}$ such that $w_{0^r} = (ab^2)^s b(ab^2)^t ab$ where $s \in \mathbb{N}$ is odd and $t \in \mathbb{N}$, or $w_{0^r} = (ab^2)^x bab$ for some $x \in \mathbb{N}$. In the former case, we are done by the previous paragraph. The latter case was covered at the beginning of Case 2. Thus in this case we are done as well, and we have completed Subcase 2b.

Let $w \in \phi(NF')$ be of the form $(ab^2)^m ab(ab^2)^n$. If m and n are both even, then $w_1 = (bab^3a)^{m/2}b(bab^3a)^{n/2}$, which is non-trivial in G. If m and n are both odd, then $w_0 = b^3a(bab^3a)^{\lfloor m/2 \rfloor}bba(b^3aba)^{\lfloor n/2 \rfloor}$, which is non-trivial in G. Hence w is non-trivial in G.

Subcase 2c: Words of the form $(ab^2)^m ab(ab^2)^n b$. Let $w \in \phi(NF')$ be of the form $(ab^2)^m ab(ab^2)^n b$. If m is even and n is odd, then $w_1 = (bab^3a)^{m/2}bba(b^3aba)^{\lfloor n/2 \rfloor}$, which is non-trivial in G. So w is non-trivial in this case.

Suppose that m is odd and n is even. Then $w_1 = ba(b^3aba)^{\lfloor m/2 \rfloor}b^3a(b^3aba)^{n/2}$, and so $w_{10} = b(ab^2)^{\lfloor m/2 \rfloor}ab(ab^2)^{n/2}$. If we conjugate w_{10} by b^3 (i.e. multiply on the left by b^3 and on the right by b), then all such words were shown to be non-trivial in Subcase 2b. Thus w_{10} is non-trivial, and so w is non-trivial in G. So we have finished Subcase 2c.

Let $w \in \phi(NF')$ be of the form $(ab^2)^m ab(ab^2)^n a$. If m is odd and n is even, then $w_1 = ba(b^3aba)^{\lfloor m/2 \rfloor}b^3a(b^3aba)^{n/2}b^3$, which is non-trivial in G. If m is even and n is odd, then $w_0 = (b^3aba)^{m/2}b^3ab^3a(bab^3a)^{\lfloor n/2 \rfloor}b$, which is non-trivial in G. Thus w is non-trivial in G.

Subcase 2d: Words of the form $(ab^2)^m ab(ab^2)^n ab$. Let $w \in \phi(NF')$ be a word of the form $(ab^2)^m ab(ab^2)^n ab$. If m and n are odd, then
$w_1 = ba(b^3aba)^{\lfloor m/w \rfloor}b^3ab^3a(bab^3a)^{\lfloor n/2 \rfloor}b$, which is non-trivial in G. So w is non-trivial in this case.

If m and n are both even, then $w_0 = (b^3aba)^{m/2}b^3a(b^3aba)^{n/2}b^3a$, and so $w_{00} = (ab^2)^{m/2}ab(ab^2)^{n/2}ab$. Thus there is an $r \in \mathbb{N}$ such that $w_{0^r} = (ab^2)^s ab(ab^2)^t ab$ where $s, t \in \mathbb{N}$ and one of s and t is odd. By the previous paragraph, w_{0^r} is non-trivial. Thus w is non-trivial in G, and we have completed Subcase 2d.

We have now shown that all words beginning with a in $\phi(NF')$ are non-trivial in G. If $w \in \phi(NF')$ is a word beginning with a b, then conjugate w by a power of b

so that w begins with an a. Either the resulting word has been covered by the above work, or the resulting word is one or two letters off from a case we have previously covered. In the latter case, the computations go exactly as above, so we omit them. Thus any element of $\phi(NF')$ is non-trivial in G, and so ϕ is injective. $\square$

Proposition 4.0.13. *The group with wreath recursion* $a = \sigma(a, b^{-1}), b = (a, b^{-1})$ *is the* $(2, 4, 4)$ *von Dyck group.*

Proof. Let G be the group with wreath recursion $a = \sigma(a, b^{-1}), b = (a, b^{-1})$, and let $g = ab^{-1}$. Then $G = \langle g, a \rangle$, and one can check that $g^2 = a^4 = (ga)^4 = 1$ in G. Thus G is a quotient of $H = \langle c, d \mid c^2 = d^4 = (cd)^4 = 1 \rangle$. Note that $g = \sigma(I, I)$, and so we can write the wreath recursion for G as $a = \sigma(a, a^3g), g = \sigma(I, I)$.

Let $\mathcal{A}$ denote the underlying automaton for G, and let $\mathcal{A}'$ denote the dual automaton for G with respect to the generating set $\{a, g\}$. Then $\mathcal{A}' = (0, 1, a, g, t', o')$ is defined as follows:

$$t'(0, g) = t'(0, a) = 1, \quad t'(1, g) = t'(1, a) = 0$$

$$o'(0, g) = o'(1, g) = I, \quad o'(0, a) = a, \quad o'(1, a) = a^3g.$$

We begin with some computations with the dual automaton. Let $n \in \mathbb{N}$, and note that

$$((ga^2)^n)_0 = \begin{cases} (ga^3ga)^{n/2} & n \text{ even} \\ a^3ga(ga^3ga)^{\lfloor n/2 \rfloor} & n \text{ odd} \end{cases}$$

$$((ga^2)^n)_1 = \begin{cases} (a^3gag)^{n/2} & n \text{ even} \\ g(a^3gag)^{\lfloor n/2 \rfloor} & n \text{ odd} \end{cases}$$

$$((ga^3ga)^n)_0 = (ga^2)^n, \quad ((ga^3ga)^n)_1 = (a^2g)^n$$

$$((a^3gag)^n)_0 = (a^2g)^n, \quad ((a^3gag)^n)_1 = (ga^2)^n.$$

Let NF' denote the same set of normal forms for H that we used in the proof of Proposition 4.0.12. Let $\phi : \{c, d\}^* \to \{a, g\}^*$ be a monoid homomorphism defined by $\phi(c) = g$ and $\phi(d) = a$. The same kind of computations that we performed in the proof of Proposition 4.0.12 will show that each element of $\phi(NF')$ represents a non-trivial element of G . Since the computations are similar to those in the proof of Proposition 4.0.12, we omit them here. □

Below is a table summarizing the information given in this chapter, including examples of non-trivial commutators for all of the simply-sectioned groups that are not metabelian. These non-trivial commutators were found using the GAP package AutomGrp developed by Muntyan and Savchuk (see [21]).

Table 4.1: Simply-Sectioned Groups

Wreath Recursion	**Non-Trivial Commutator**	**Metabelian Group**
$a = \sigma(a, I),\ b = (a, a^{-1})$		Klein bottle group
$a = \sigma(a, I),\ b = (a, b^{-1})$	$[[a, b], [ab, ba]]$	
$a = \sigma(a, I),\ b = (b, a)$	$[[a, b], [ab, ba]]$	
$a = \sigma(a, I),\ b = (b, a^{-1})$	$[[a, b], [ab, ba]]$	
$a = \sigma(a, I),\ b = \sigma(I, I)$		$D_\infty \rtimes \mathbb{Z}$
$a = \sigma(a, I),\ b = \sigma(a, a^{-1})$		$D_\infty \rtimes \mathbb{Z}$
$a = \sigma(a, I),\ b = \sigma(a, b)$	$[[a, b], [ab, ba]]$	
$a = \sigma(a, I),\ b = \sigma(a, b^{-1})$	$[[a, b], [ab, ba]]$	
$a = \sigma(a, I),\ b = \sigma(a^{-1}, b^{-1})$	$[[a, b], [ab, b]]$	

Continued on next page

Table 4.1 – continued from previous page

Wreath Recursion	Non-Trivial Commutator	Metabelian Group
$a = \sigma(a, I),\ b = \sigma(b, a)$	$[[a, b], [ab, ba]]$	
$a = \sigma(a, I),\ b = \sigma(b, a^{-1})$	$[[a, b], [ab, b]]$	
$a = \sigma(a, I),\ b = \sigma(b^{-1}, I)$	$[[a, b], [ab, b]]$	
$a = \sigma(a, a),\ b = (b, a)$		D_∞
$a = \sigma(a, a),\ b = \sigma(a, a)$		$\mathbb{Z}_2 \times \mathbb{Z}_2$
$a = \sigma(a, a),\ b = \sigma(I, I)$		$\mathbb{Z}_2 \times \mathbb{Z}_2$
$a = \sigma(a, b),\ b = (a, I)$	$[[a, b], [ab, ba]]$	
$a = \sigma(a, b),\ b = (a, b)$		lamplighter group
$a = \sigma(a, b),\ b = (a, b^{-1})$	$[[a, b], [ab, ba]]$	
$a = \sigma(a, b),\ b = (a, a^{-1})$	$[[a, b], [ab, ba]]$	
$a = \sigma(a, b),\ b = \sigma(a, I)$	$[[a, b], [ab, ba]]$	
$a = \sigma(a, b),\ b = \sigma(a^{-1}, I)$	$[[a, b], [ab, ba]]$	
$a = \sigma(a, b),\ b = \sigma(b, I)$	$[[a, b], [ab, ba]]$	
$a = \sigma(a, b),\ b = (b, a^{-1})$	$[[a, b], [ab, ba]]$	
$a = \sigma(a, b),\ b = \sigma(b^{-1}, I)$	$[[a, b], [ab, b]]$	
$a = \sigma(a, b^{-1}),\ b = (a, b^{-1}$		$\langle a, b \mid a^2 = b^4 = (ab)^4 = 1\rangle$
$a = \sigma(a, b^{-1}),\ b = (a, I)$	$[[a, b], [ab, ba]]$	
$a = \sigma(a, b^{-1}),\ b = (a, a^{-1})$	$[[a, b], [ab, ba]]$	
$a = \sigma(a, b^{-1}),\ b = (a, b)$	$[[a, b], [ab, ba]]$	
$a = \sigma(a^{-1}, I),\ b = (b, a^{-1})$	$[[a, b], [ab, b]]$	
$a = \sigma(a^{-1}, I),\ b = (a, b)$	$[[a, b], [ab, b]]$	
$a = \sigma(a^{-1}, I),\ b = (a, b^{-1})$	$[[a, b], [ab, b]]$	

Continued on next page

Table 4.1 – continued from previous page

Wreath Recursion	Non-Trivial Commutator	Metabelian Group
$a = \sigma(a^{-1}, I),\ b = \sigma(I, I)$		$D_\infty \rtimes \mathbb{Z}$
$a = \sigma(a^{-1}, I),\ b = \sigma(a, b)$	$[[a, b], [ab, ba]]$	
$a = \sigma(a^{-1}, I),\ b = \sigma(b, I)$	$[[a, b], [ab, b]]$	
$a = \sigma(a^{-1}, b),\ b = (a, I)$	$[[a, b], [a, ba]]$	
$a = \sigma(a^{-1}, b),\ b = (a, a^{-1})$	$[[a, b], [a, ba]]$	
$a = \sigma(a^{-1}, b),\ b = (a, b)$	$[[a, b], [a, ba]]$	
$a = \sigma(a^{-1}, b),\ b = \sigma(a, I)$	$[[a, b], [a, ba]]$	
$a = \sigma(a^{-1}, b),\ b = \sigma(b, I)$	$[[a, b], [a, ba]]$	
$a = \sigma(b, I),\ b = (a, I)$	$[[a, b], [b, a^{-1}]]$	
$a = \sigma(b, I),\ b = (a, b)$	$[[a, b], [ab, ba]]$	
$a = \sigma(b, I),\ b = (a, b^{-1})$	$[[a, b], [ab, ba]]$	
$a = \sigma(b, I),\ b = (a^{-1}, b)$	$[[a, b], [ab, ba]]$	
$a = \sigma(b, I),\ b = \sigma(I, I)$		dihedral group of order 8
$a = \sigma(b, I),\ b = \sigma(a, a)$	$[[a, b], [a, ba]]$	
$a = \sigma(b, I),\ b = \sigma(a, b)$	$[[a, b], [a, ba]]$	
$a = \sigma(b, I),\ b = \sigma(a, b^{-1})$	$[[a, b], [a, ba]]$	
$a = \sigma(b, I),\ b = \sigma(a^{-1}, I)$	$[[a, b], [a, ba]]$	
$a = \sigma(b, I),\ b = \sigma(a^{-1}, b)$	$[[a, b], [a, ba]]$	
$a = \sigma(b, I),\ b = \sigma(a^{-1}, b^{-1})$	$[[a, b], [a, ba]]$	
$a = \sigma(b, b),\ b = (a, b^{-1})$		D_∞
$a = \sigma(b, b),\ b = \sigma(a, I)$	$[[a, b], [ab, b]]$	
$a = \sigma(b, b),\ b = \sigma(b, I)$		$D_\infty \rtimes \mathbb{Z}$

Continued on next page

Table 4.1 – continued from previous page

Wreath Recursion	Non-Trivial Commutator	Metabelian Group
$a = \sigma(b, a),\ b = (a, b)$	$[[a, b], [ab, ba]]$	
$a = \sigma(b, a),\ b = (a, b^{-1})$	$[[a, b], [ab, ba]]$	
$a = \sigma(b, a),\ b = \sigma(a, a)$	$[[a, b], [a, ba]]$	
$a = \sigma(b, a),\ b = \sigma(a, b)$	$[[a, b], [a, ba]]$	
$a = \sigma(b, a),\ b = \sigma(a, b^{-1})$	$[[a, b], [a, ba]]$	
$a = \sigma(b, b),\ b = \sigma(a^{-1}, I)$	$[[a, b], [a, ba]]$	
$a = \sigma(b, b^{-1}),\ b = (a, I)$		dihedral group of order 8
$a = \sigma(b, b^{-1}),\ b = \sigma(a, I)$		$\langle a, b \mid a^2 = b^4 = (ab)^4 = 1\rangle$
$a = \sigma(b^{-1}, I),\ b = (a, I)$	$[[a, b], [a, ba]]$	
$a = \sigma(b^{-1}, I),\ b = (a, a^{-1})$	$[[a, b], [a, ba]]$	
$a = \sigma(b^{-1}, I),\ b = (a, a^{-1})$	$[[a, b], [a, ba]]$	
$a = \sigma(b^{-1}, I),\ b = (a, b^{-1})$	$[[a, b], [a, ba]]$	
$a = \sigma(b^{-1}, I),\ b = \sigma(a, a)$	$[[a, b], [a, ba]]$	

Chapter 5

Faithful, Self-Similar Actions of Heisenberg Groups and Upper Triangular Matrix Groups

In this chapter we construct faithful, self-similar actions of various matrix groups. We do this by constructing virtual endomorphisms with trivial core, which in principle will work to show that any self-similar group actually is self-similar.

Definition 5.0.14. [Definition 2.5.1 of [22]] Let $H \leq G$ be a subgroup of finite index. A *virtual endomorphism* $\phi : H \to G$ is a homomorphism from H to G. The *core* of a virtual endomorphism $\phi : H \to G$ is the largest normal subgroup N of G contained in H that is ϕ-invariant, i.e. the *core* of ϕ is the largest normal subgroup N of G such that $\phi(N) = N$.

A virtual endomorphism $\phi : H \to G$ induces a self-similar action of G on a p-ary tree where $p = [G : H]$. To define this action, choose a transversal $T = \{t_1, ..., t_p\}$ for H in G, with $t_1 = 1$. For $g \in G$, let $\overline{g}$ denote its coset representative in T. Now fix

$g \in G$. The permutation of $\{t_1, ...t_p\}$, denoted σ_g, induced by g is given by

$$\sigma_g(x) = y \text{ if and only if } \overline{gt_x} = t_y$$

for all $x, y \in \{1, ..., p\}$ and the section of g at r is defined by

$$g_s = \phi(\overline{gt_s}^{-1} g t_s)$$

for all $s \in T$.

This self-similar action may not be faithful, but a theorem by Nekrashevych says precisely when the action is faithful.

Theorem 5.0.15. *[**Proposition 2.7.5 of [22]**] The action of G on a p-ary tree induced by a virtual endomorphism $H \to G$ is faithful if and only if the core of ϕ is trivial.*

Definition 5.0.16. *The Heisenberg group of dimension* $2n+1$, denoted H^{2n+1}, is the group of square matrices of size $n+2$ of the form

$$\begin{pmatrix} 1 & a & b \\ 0 & I_n & c \\ 0 & 0 & 1 \end{pmatrix}$$

where a is a row vector of length n, c is a column vector of length n and the entries of the matrix come from R.

Proposition 5.0.17. *H^{2n+1} is self-similar for any n.*

Proof. Fix an n, and let $H = H^{2n+1}$. Consider the subgroup of H, denoted by K, of

matrices of the form

$$\begin{pmatrix} 1 & 2a & 2b \\ 0 & I_n & c \\ 0 & 0 & 1 \end{pmatrix}.$$

Then K has finite index in H. To see this, let A_{ij} denote the matrix with $a_{ij} = 1$ and zeroes elsewhere, except let the main diagonal consist of 1's. Then $\{A_{ij} \in H\}$ is a transversal for K.

Consider the function $\phi : K \to H$ given by

$$\phi \begin{pmatrix} 1 & 2a & 2b \\ 0 & I_n & c \\ 0 & 0 & 1 \end{pmatrix} = \begin{pmatrix} 1 & a & b \\ 0 & I_n & c \\ 0 & 0 & 1 \end{pmatrix}.$$

It is straightforward to check that ϕ is a homomorphism. Note that if $A = \begin{pmatrix} 1 & 2k & 2m \\ 0 & I_n & p \\ 0 & 0 & 1 \end{pmatrix} \in K$ and either k or m is non-zero, then repeated application of ϕ to A will eventually map A outside of K. Hence any ϕ-invariant subset of K must consist of matrices whose top row is all zeroes (except for the initial 1).

Now let $B = \begin{pmatrix} 1 & 0 & 0 \\ 0 & I_n & r \\ 0 & 0 & 1 \end{pmatrix}$ with $r \in \mathbb{Z} - \{0\}$, and let $C = \begin{pmatrix} 1 & 2s & 2t \\ 0 & I_n & v \\ 0 & 0 & 1 \end{pmatrix} \in K$ for some $s, t, v \in \mathbb{Z}$. Then

$$CBC^{-1} = \begin{pmatrix} 1 & 0 & 2sr \\ 0 & I_n & r \\ 0 & 0 & 1 \end{pmatrix}$$

Thus, choosing $s \in \mathbb{Z} - \{0\}$ ensures that repeated application of ϕ to CBC^{-1} yields a matrix not in K. By Theorem 5.0.15, the result follows. $\square$

Definition 5.0.18. The *nth upper triangular group*, which we denote by $UT(n)$, is the group of $n \times n$ upper triangular matrices with 1's along the diagonal and entries from R.

Proposition 5.0.19. *$UT_{\mathbb{Z}}(n)$ is self-similar for any n.*

Proof. Fix an n, and let $G = UT(n)$. Consider the finite index subgroup K of G given by

$$K := \{A = (a_{ij}) \in G \mid a_{ij} \text{ is even for } 1 \leq i \leq n-2 \text{ and } i+1 \leq j \leq n\}$$

In other words, K consists of all matrices whose entries above the main diagonal are even except for possibly the $(n-1)n$-th entry. Then K has finite index in G. To see this, let $T = \{A \in G \mid a_{ij} \in \{0, 1\}\}$. Then T is a transversal for K in G.

Define a virtual endomorphism $\phi : K \to G$ as follows. For any $A = (a_{ij})$ in K, let $\phi(A) = (b_{ij})$ where

$$b_{ij} = \begin{cases} \frac{a_{ij}}{2} & \text{if } 1 \leq i \leq n-2 \text{ and } (j = n-1 \text{ or } j = n) \\ a_{ij} & \text{otherwise} \end{cases}$$

It is straightforward to check that ϕ is a homomorphism.

Let $A \in K - \{I_n\}$. In order to show that the core of ϕ is trivial, we demonstrate a $B \in K$ (depending on A) such that there exists an $n \in \mathbb{N}$ with $\phi^n(BAB^{-1}) \notin K$. We break the analysis into cases.

Case 1: Suppose that for some i, j with $1 \leq i \leq n-2$ and $j > n-2$ we have that $a_{ij} \neq 0$. Then repeated applications of ϕ to A will eventually yield a matrix that is

not in K, and so A is not in the core of ϕ.

Case 2: Suppose that for all i, j with $1 \leq i \leq n-2$ and $j > n-2$, $a_{ij} = 0$. For each r, s with $1 \leq r, s \leq n$ and $r \neq s$, let E_{rs} denote the elementary matrix such that $E_{kk} = 1$ for all k, $e_{rs} = 2$, and all other entries are zero.

If $a_{(n-1)n} \neq 0$, then let $B = E_{1(n-1)} A E_{1(n-1)}^{-1}$. Left multiplication of A by $E_{1(n-1)}$ multiplies the $(n-1)$-*st* row A by 2 and adds the resulting row to the first row of A. Right multiplication by $E_{1(n-1)}^{-1}$ multiplies the first column of $E_{1(n-1)}A$ by -2 and adds the resulting column to the $(n-1)$-*st* column of $E_{1(n-1)}A$. Thus $b_{1n} = 2a_{(n-1)n} \neq 0$, and so repeated applications of ϕ to B will yield a matrix that is not in K.

Suppose $a_{(n-1)n} = 0$. Since $A \neq I_n$, there exist u, v such that $u \neq v$ and $a_{uv} \neq 0$. Let $B = E_{v(n-1)} A E_{v(n-1)}^{-1}$. Left multiplication of A by $E_{v(n-1)}$ multiplies the $(n-1)$-*st* row of A by 2 and adds the resulting row to the v-*th* row of A. Right multiplication of $E_{v(n-1)}A$ by $E_{v(n-1)}^{-1}$ multiplies the v-*th* column of $E_{v(n-1)}A$ by -2 and adds the resulting column to the $(n-1)$-*st* column of $E_{v(n-1)}A$. Note that $b_{v(n-1)} = -2a_{uv} \neq 0$, and so repeated applications of ϕ to B will eventually yield a matrix that is not in K. $\square$

Bibliography

[1] S. Alešin. Finite automata and the burnside problem for periodic groups. *Acta. Math.*, 11:319–328, 1972.

[2] L. Bartholdi and V. Nekrashevych. Thurston equivalence of topological polynomials. *Acta. Math.*, 197:1–51, 2006.

[3] I. Bondarenko, R. Grigorchuk, R. Krevchenko, Y. Muntyan, V. Nekrashevych, D. Savchuk, and Z. Šunić. Classification of groups generated by 3-state automata over a 2-letter alphabet. *Algebra and Discrete Mathematics*, pages 1–163, 2008.

[4] A. Cain. Automaton semigroups. *Theoretical Computer Science*, 410:5022–5038, 2009.

[5] A. Clifford and G. Preston. *The Algebraic Theory of Semigroups, Vol. I.* Mathematical Surveys, Providence, RI, 1961.

[6] H. Coxeter and W.O.J. Moser. *Generators and Relations for Discrete Groups.* Springer-Verlag, New York, New York, 1980.

[7] S. Eilenberg. *Automata, Languages, and Machines.* Academic Press, New York, New York, 1974.

[8] V. Glushkov. Abstract theory of automata. *Uspekhi mat. nauk.*, 16:3–62, 1961.

[9] E. Golod. On nil-algebras and finitely approximable p-groups. *Izv. Akad. Nauk SSSR Ser. Mat.*, 28:273–276, 1964.

[10] E. Golubov. Finitely approximable regular semigroups (russian). *Mat. Zametki*, 17:423–432, 1975.

[11] R. Grigorchuk. On burnside's problem on periodic groups. *Functional Anal. Appl.*, 14:41–43, 1980.

[12] R. Grigorchuk. On the milnor problem of group growths. *Dokl. Akad. Nauk SSSR*, 271:30–33, 1983.

[13] R. Grigorchuk, V. Nekrashevych, and V. Suschansky. Automata, dynamical systems, and groups. *Tr. Mat. Inst. Sketlova*, 231:134–214, 2000.

[14] R. Grigorchuk and I. Pak. Groups of intermediate growth: An introduction. *Enseign. Math.*, 54:251–272, 2008.

[15] R. Grigorchuk and Z. Šunić. Self-similarity and branching in group theory. *London Mathematical Society Lecture Note Series*, 339:36–95, 2007.

[16] R. Grigorchuk and A. Zuk. The lamplighter group as a group generated by 2-state automaton and its spectrum. *Geom. Dedicata*, 87:209–244, 2001.

[17] J. Hopcroft and J. Ullman. *Introduction to Automata, Languages, and Computation.* Addison-Wesley Publishing, Reading, MA, 1979.

[18] G. Lallemont. *Semigroups and Combinatorial Applications.* John Wiley & Sons, New York, New York, 1979.

[19] M. Lothaire. *Combinatorics on Words.* Addison-Wesley Publishings, Reading, MA, 1983.

[20] A. Maltcev. On homomorphisms onto finite groups. *Ivanov. Gos. Ped. Inst. Uč. Zap.*, 18:49–60, 1958.

[21] Y. Muntyan and D. Savchuk. GAP package AutomGrp. Documentation and download can be found at http://www.gap-system.org/Packages/automgrp.html.

[22] V. Nekrashevych. *Self-Similar Groups*, volume 117. American Mathematical Society, Providence, RI.

[23] I. Reznikov and V. Sushchansky. Growth functions of two-state automata over a two-element alphabet. *Dopov. Nats. Akad. Nauk Ukr. Mat. Prirodozn Tekh. Nauki*, 2:76–81, 2002.

[24] E. Robertson, N Ruškuc, and J. Wiegold. Generators and relations of direct products of semigroups. *Trans. Amer. Math. Soc.*, 350:2665–2685, 1998.

[25] K. Ruohonen. Reversible machines and post's correspondence problem for biprefix morphisms. *Elektron. Inform. Kybernet.*, 21:579–595, 1985.

[26] D. Savchuk and Y. Vorobets. Automata generating free products of groups of order 2. preprint.

[27] S. Sidki. Automorphisms of one-rooted trees: growth, circuit structure and acyclicity. *J. of Mathematical Sciences (New York)*, 100:1925–1943, 2000.

[28] S. Sidki. Finite automata of polynomial growth do not generate a free group. *Geom. Dedicata*, 108:193–204, 2004.

[29] P. Silva and B. Steinberg. On a class of automata groups generalizing lamplighther groups. *Internat. J. Algebra Comput.*, 15:1213–1234, 2005.

[30] C. Sims. *Computations with finitely presented groups*. Cambridge University Press, Cambridge, 1994.

[31] J. Slupik and V. Sushchansky. Inverse semigroups generated by two-state partially defined automata. *Contributions to general algebra*, 16:261–273, 2005.

[32] B. Steinberg, M. Vorobets, and Y. Vorobets. Automata over a binary alphabet generating free groups of even rank. To appear in IJAC.

[33] M. Vorobets and Y. Vorobets. On a free group of transformations defined by an automaton. *Geom. Dedicata*, 124:237–249, 2000.

[34] M. Vorobets and Y. Vorobets. On a series of finite automata defining free transformation groups. *Groups Geom. Dyn.*, 4:377–405, 2010.